SONY

Network Surveillance Products

QUICK REFERENCE GUIDE

Table of Contents

New Lineup of IPELA ENGINE Network Cameras 2

Network Fixed Cameras 3, 4

Network Mini Dome Cameras 5, 6, 7, 8

Network Rapid Dome and PTZ Cameras 9, 10, 11

Hybrid Camera Solutions 12, 13

Surveillance Video Encoders 14, 15

Network Surveillance Recording Servers 16

Intelligent Monitoring Software 17

IP Mini Dome Cameras Enclosures and Mounts 18

IP Fixed Cameras Enclosures and Mounts 19

IP Rapid Dome and PTZ Cameras Enclosures and Mounts 20

Mount Options and Enclosures 22

New Lineup of IPELA ENGINE Network Cameras

Powered by the IPELA ENGINE™ signal processing system*, Sony's new generation of cameras delivers excellent HD image quality with high sensitivity and wide dynamic range.

W Series with IPELA ENGINE PRO System

The W Series cameras are the most advanced rapid dome cameras in the security industry and adopt the top-end signal processing system – IPELA ENGINE™ PRO. This series consists of four models – two indoor and two outdoor unitized models – all of which provide advanced features such as a 130dB dynamic range in FHD with View-DR technology, 60p high frame rate, 30x optical zoom, pan speed of 700°/s, Gyroscopic Image Stabilizer, Defog Image Processing, and Focal Plane Distortion Correction. The SNC-WR630 and SNC-WR600 are 1080p and 720p models, while the SNC-WR632 and SNC-WR602 are 1080p and 720p unitized models.

V and E Series with IPELA ENGINE EX System

The V Series cameras are the top of the line in the EX series with value-added features, while the E Series cameras are more cost-effective compared to the V Series, and are best suited for entry-to-mid level applications. Both series provide a variety of features, such as View-DR®, picture mode, H.264 CBR/VBR with high/main profiles, Image Stabilizer, easy installation (Easy Zoom, Easy Focus), and DEPA™ Advanced Intelligent Video Analytics. The value-added features for the V Series include a 60p high frame rate and Edge Storage (onboard recording with SD cards). Both series offer a range of models with various form factors including vandal-resistant, IR ruggedized mini dome, and box-type models.

IR Ruggedized Cameras

Sony's IR ruggedized mini dome cameras are designed for use in harsh outdoor environments, where lighting conditions during the night are poor, and dust/water ingress as well as vandalism may pose challenges. This type of camera features a minimum illumination of 0 lx in B/W mode using built-in IR illuminators, an operating temperature range from -40°F (-40°C) to +122°F (+50°C), and IK10-rated vandal resistant and IP66-rated water-resistant/dust-tight features. There are four models in the product range: The V Series offers the SNC-VM632R 1080p and SNC-VM602 720p models, while the E Series offers the SNC-EM632R 1080p and SNC-EM602 720p models.

Half-inch Full HD CMOS Sensor Camera

The SNC-VB635 camera is designed for use in highly demanding conditions such as transportation, municipality, and energy applications. Thanks to the high sensitivity of its 1/1.9-type 1080p Exmor® CMOS sensor, this camera can provide high picture quality even in very low-light conditions. Other key features include a 90 dB dynamic range with View-DR technology, True Day/Night, and RS-485 external control.

C Series with IPELA ENGINE EX System

The C Series offers 720/30p compact cameras that adopt an all-in-one design, incorporating a passive IR sensor, white-light LED illuminators, a speaker, and a microphone. Another convenient feature is Edge Storage (onboard recording with micro SD cards). These cameras provide high picture quality with a wide horizontal viewing angle of 120°. There are two models in the C Series: The SNC-CX600W is a wireless network model that offers easy, reliable, and stable network operation thanks to the WPS (Wi-Fi Protected Setup) standard, Wi-Fi certification, and the WMM (Wi-Fi Multimedia) standard, while the SNC-CX600 is a PoE (Power over Ethernet) model that requires just a single network cable for data transmission and power supply.

X Series with IPELA ENGINE EX System

X Series cameras are 1080/30p mini dome models that are primarily designed for use in vehicles and for outdoor applications such as retail, banking, and education. Key features include a 90 dB dynamic range with View-DR technology, IK10 vandal resistance, IP66 ingress protection, and Image Stabilization. There are three models in the X Series: The SNC-XM632 is a perfect choice for for general outdoor applications, while the SNC-XM636 and SNC-XM637 are ideal for train surveillance, providing high picture quality with a wide horizontal viewing angle of approximately 83° and 113°, respectively.

360° Hemispheric-view Camera (H Series)

The SNC-HM662 is a 360° hemispheric-view dome camera with a 5 megapixel CMOS sensor. It can be used for activity monitoring and situational awareness in various environments such as retail outlets, education, and office buildings. The SNC-HM662 provides a variety of 11 view modes that include a 360° hemispheric view, 180° panoramic view, and multiple view. Other key features include IP66 ingress protection, IK10 vandal resistance, two-way audio, and Edge Storage (onboard recording with micro SD cards).

* The SNC-HM662 is not equipped with an IPELA ENGINE processor.
All other V, E, X and Z series do not include IPELA ENGINE signal processing system.

IP Fixed Cameras

Series Name	V Series with IPELA ENGINE EX				E Series with IPELA ENGINE EX						C Series with IPELA ENGINE EX	
Model Name	SNC-VB632D	SNC-VB635	SNC-VB630	SNC-VB600	SNC-EB632R	SNC-EB602R	SNC-EB630	SNC-EB600	SNC-EB630B	SNC-EB600B	SNC-CX600W	SNC-CX600
		(lens not included)										
Video Compression Format	H.264 (High/Main/Baseline Profile)/JPEG				H.264 (High/Main/Baseline Profile)/JPEG						H.264 (High/Main/Baseline Profile)/JPEG	
Multi Streaming Capability	Triple streaming				Triple streaming						Triple streaming	
Computer Display Format	Full HD 1080			HD (*1)	Full HD 1080	HD (*1)	Full HD 1080	HD (*1)	Full HD 1080	HD (*1)	HD (*1)	
Maximum Resolution	1920 x 1080			1280 x 1024	1920 x 1080	1280 x 1024	1920 x 1080	1280 x 1024	1920 x 1080	1280 x 1024	1280 x 720	
IR Illuminators	Yes (Wave length: 850 nm [typical], IR LED: 20 pieces)	No			Yes (Wave length: 850 nm [typical], IR LED: 20 pieces)	Yes (Wave length: 850 nm [typical], IR LED: 10 pieces)	No				No	
White-light LED Illuminator	Yes (White LED: 4 pieces)	No			No						Yes	
Built-in Speaker and Microphone	No	No			No						Yes	
Outdoor Use/Ingress Protection	Yes/IP66	No			Yes/IP66		No				No	
Vandal Resistant	IK08	No			No						No	
Horizontal Viewing Angle	105.3° to 35.6°	NA	114.2° to 40.0°	100.0° to 35.7°	105.3° to 35.6°	92.9° to 31.8°	114.2° to 40.0°	100.0° to 35.7°	114.2° to 40.0°	100.0° to 35.7°	120°	
Zoom Ratio	Optical zoom 3x; Digital zoom 4x; Total zoom 12x	NA	2.9x optical zoom		Optical zoom 3x, Digital zoom 4x, Total zoom 12x		2.9x optical zoom	2.7x optical zoom	2.9x optical zoom	2.7x optical zoom	NA	
Focal Length	f = 3.0 mm to 9.0 mm	NA	f = 2.8 mm to 8.0 mm		f = 3.0 mm to 9.0 mm		f = 2.8 mm to 8.0 mm	f = 3.0 mm to 8.0 mm	f = 2.8 mm to 8.0 mm	f = 3.0 mm to 8.0 mm	f = 1.83 mm	
Lens	Built-in varifocal lens	C/CS mount lens (not included)	CS mount varifocal lens		Built-in varifocal lens		CS mount varifocal lens				Fixed lens	
Image Sensor	1/2.9-type progressive scan Exmor® CMOS sensor	1/1.9-type progressive scan Exmor CMOS sensor	1/2.9-type progressive scan Exmor CMOS sensor	1/3-type progressive scan Exmor CMOS sensor	1/2.9-type progressive scan Exmor CMOS sensor	1/3-type progressive scan Exmor CMOS sensor	1/2.9-type progressive scan Exmor CMOS sensor	1/3-type progressive scan Exmor CMOS sensor	1/2.9-type progressive scan Exmor CMOS sensor	1/3-type progressive scan Exmor CMOS sensor	1/4-type progressive scan Exmor CMOS sensor	
Tone Correction	Visibility Enhancer (VE)				Visibility Enhancer (VE)						Visibility Enhancer (VE)	
Wide Dynamic Range	Equivalent to 90 dB with View-DR technology			Equivalent to 130 dB with View-DR technology	Equivalent to 90 dB with View-DR technology	Equivalent to 130 dB with View-DR technology	Equivalent to 90 dB with View-DR technology	Equivalent to 130 dB with View-DR technology	Equivalent to 90 dB with View-DR technology		More than 60 dB	
Minimum Illumination (50 IRE)	Color: 0.1 lx (F1.2, View-DR OFF, VE OFF, AGC ON, 1/30 s, 30 fps) B/W: 0 lx (IR illuminator ON)	Color: 0.04 lx, B/W: 0.03 lx (F1.2, View-DR OFF, VE OFF, AGC ON, 1/30 s, 30 fps)	Color: 0.1 lx, B/W: 0.07 lx (F1.2, View-DR OFF, VE OFF, AGC ON, 1/30 s, 30 fps)	Color: 0.05 lx, B/W: 0.04 lx (F1.2, View-DR OFF, VE OFF, AGC ON, 1/30 s, 30 fps)	Color: 0.1 lx (F1.2, View-DR OFF, VE OFF, AGC ON, 1/30 s, 30 fps) B/W: 0 lx (IR illuminator ON)	Color: 0.05 lx (F1.2, View-DR OFF, VE OFF, AGC ON, 1/30 s, 30 fps) B/W: 0 lx (IR illuminator ON)	Color: 0.1 lx, B/W: 0.07 lx (F1.2, View-DR OFF, VE OFF, AGC ON, 1/30 s, 30 fps)	Color: 0.05 lx, B/W: 0.04 lx (F1.0, View-DR OFF, VE OFF, AGC ON, 1/30 s, 30 fps)	Color: 0.1 lx, B/W: 0.1 lx (F1.2, View-DR OFF, VE OFF, AGC ON, 1/30 s, 30 fps)	Color: 0.05 lx, B/W: 0.05 lx (F1.0, View-DR OFF, VE OFF, AGC ON, 1/30 s, 30 fps)	Color: 1.0 lx (F2.0, VE OFF, AGC MAX, 1/30 s, 30 fps)	
Maximum Frame Rate	60 fps (H.264) at 1920 x 1080, 60 fps (JPEG) at 1280 x 720			60 fps (H.264/JPEG) at 1280 x 1024	30 fps (H.264/JPEG) at 1920 x 1080	30 fps (H.264) at 1280 x 1024	30 fps (H.264/JPEG) at 1920 x 1080	30 fps (H.264/JPEG) at 1280 x 1024	30 fps (H.264/JPEG) at 1920 x 1080	30 fps (H.264/JPEG) at 1280 x 1024	30 fps (H.264/JPEG) at 1280 x 720	
Day/Night	True D/N				True D/N				Electrical D/N		No	
Noise Reduction	XDNR® Technology				XDNR® Technology						XDNR® Technology	
Image Stabilizer	Yes				Yes						Yes	
Edge Storage	Yes				No						Yes	
Card Slot	SD card				No						micro SD card	
Wireless Network	No				No						IEEE802.11b/g/n	No
Analog Video/Monitor Output	Yes				Yes/for setup only						No	
Analytics Architecture	DEPA Advanced				DEPA Advanced						DEPA Advanced	
Audio Capability	Yes, 2-way Audio				No						Yes, 2-way Audio	
ONVIF™ Conformance	Profile S				Profile S						Profile S	
Power Requirements	IEEE802.3at compliant (PoE/PoE+ system), AC 24 V ±20%, 50 Hz/60 Hz, DC 12 V ±10%	IEEE802.3af compliant (PoE), AC 24 V, DC 12 V			IEEE 802.3af compliant (PoE)						DC 5 V	IEEE802.3af compliant (PoE)
Power Consumption	Max. 21 W (AC 24 V/DC 12 V) Max. 17 W (IEEE802.3at (PoE+) Max. 12.5 W (IEEE802.3af (PoE)	6 W max.			Max. 11.4 W (IEEE 802.3af-compliant PoE system)	Max. 10.0 W (IEEE 802.3af-compliant PoE system)	6 W max.				5.0 W max.	
Operating Temperature	-40°F to +140°F (-40°C to +60°C) (LED OFF, PoE+, AC 24 V, DC 12 V) -40°F to +122°F (-40°C to +50°C) (LED ON, PoE+, AC 24 V, DC 12 V) 14°F to +140°F (-10°C to +60°C) (LED OFF, PoE) 14°F to 122°F (-10°C to +50°C) (LED ON, PoE)	14°F to 140°F (-10°C to +60°C)	14°F to 122°F (-10°C to +50°C)		-22°F to +122°F (-30°C to +50°C)		14°F to 122°F (-10°C to +50°C)				Wired: 32°F to 122°F (0°C to 50°C) Wireless: 32°F to 104°F (0°C to 40°C)	32°F to 122°F (0°C to +50°C)
Dimensions	3 3/4 x 3 3/4 x 7 1/8 inches (93 x 93 x 180.9 mm) ø5 5/8 x 12 3/8 inches (ø140 x 313.4 mm) including arm	Approx. 3 1/8 x 3 x 5 3/4 inches (79 x 74 x 145 mm) without lens	2 7/8 x 2 1/2 x 7 7/8 inches (72 x 63 x 197 mm) with lens		3 3/4 x 3 3/4 x 6 3/8 inches (93 x 93 x 160.9 mm) ø5 3/8 x 12 3/8 inches (ø140 x 313.4 mm) including the arm		2 7/8 x 2 1/2 x 7 7/8 inches (72 x 63 x 199 mm) with lens	2 7/8 x 2 1/2 x 7 1/2 inches (72 x 63 x 188 mm) with lens	2 7/8 x 2 1/2 x 7 7/8 inches (72 x 63 x 199 mm) with lens	2 7/8 x 2 1/2 x 7 1/2 inches (72 x 63 x 188 mm) with lens	Approx. 2 13/32 x 3 3/4 x 1 5/8 inches (61 x 95 x 41 mm)	

(*1) Definition of HD: Vertical resolution of at least 720 pixels, and streaming capability of more than 30 fps at 1280 x 720 pixels.

All cameras in this chart comply with UL2044.

IP Fixed Cameras

Series Name	V Series				E Series					X Series	
Model Name	SNC-CH280	SNC-CH180	SNC-CH240	SNC-CH140	SNC-CH260	SNC-CH160	SNC-CH220	SNC-CH120	SNC-EB520	SNC-CH210	SNC-CH110
Video Compression Format	H.264/MPEG-4/JPEG				H.264/MPEG-4/JPEG					H.264/MPEG-4/JPEG	
Multi Streaming Capability	Dual streaming				Dual streaming					Dual streaming	
Computer Display Format	Full HD 1080	HD (*1)	Full HD 1080	HD (*1)	Full HD 1080	HD (*1)	Full HD 1080	HD (*1)	SD	Full HD 1080	HD (*1)
Maximum Resolution	1920 x 1440	1280 x 1024	1920 x 1440	1280 x 1024	1920 x 1440	1280 x 1024	1920 x 1440	1280 x 1024	800 x 600	2048 x 1536	1280 x 960
IR Illuminators	Yes		No		Yes		No			No	
White-light LED Illuminator	No				No					No	
Built-in Speaker and Microphone	No				No					No	
Outdoor Use/Ingress Protection	Yes/IP66		No		Yes/IP66		No			No	
Vandal Resistant	No				No					No	
Horizontal Viewing Angle	88.5° to 32.3°	85.4° to 31.2°	101.2° to 47.0°	96.5° to 33.9°	88.5° to 32.3°	85.4° to 31.2°	101.2° to 47.0°	96.5° to 33.9°	89.2° to 34.6°	89°	80.7°
Zoom Ratio	2.9x optical zoom		2.1x optical zoom	2.9x optical zoom	2.9x optical zoom	2.9x optical zoom	2.1x optical zoom	2.9x optical zoom	2.6x optical zoom	NA	
Focal Length	f=3.1 mm to 8.9 mm		f=2.8 mm to 6.0 mm	f = 2.8 mm to 8.0 mm	f=3.1 mm to 8.9 mm		f = 2.8 mm to 6.0 mm	f = 2.8 mm to 8.0 mm	f = 3.0 mm to 8.0 mm	f = 3.3 mm	f = 2.3 mm
Lens	Built-in varifocal lens		CS mount varifocal lens		Built-in varifocal lens		CS mount varifocal lens			Built-in fixed focal lens	
Image Sensor	1/2.8-type progressive scan Exmor CMOS sensor	1/3-type progressive scan Exmor CMOS sensor	1/2.8-type progressive scan Exmor CMOS sensor	1/3-type progressive scan Exmor CMOS sensor	1/2.8-type progressive scan Exmor CMOS sensor	1/3-type progressive scan Exmor CMOS sensor	1/2.8-type progressive scan Exmor CMOS sensor	1/3-type progressive scan Exmor CMOS sensor		1/2.8-type progressive scan Exmor CMOS sensor	1/3.8-type progressive scan CMOS sensor
Tone Correction	Visibility Enhancer (VE)				No					No	
Wide Dynamic Range	Equivalent to 90 dB with View-DR technology	Equivalent to 130 dB with View-DR technology	Equivalent to 90 dB with View-DR technology	Equivalent to 130 dB with View-DR technology	More than 60 dB					NA	
Minimum Illumination (50 IRE)	Color: 0.40 lx, B/W: 0 lx (IR illuminator ON) (F1.2, View-DR OFF, XDNR ON-Middle, VE OFF, AGC High)	Color: 0.22 lx, B/W: 0 lx (IR illuminator ON) (F1.2, View-DR OFF, XDNR ON-Middle, VE OFF, AGC High)	Color: 0.40 lx, B/W: 0.25 lx (F1.2, View-DR OFF, XDNR ON-Middle, VE OFF, AGC High)	Color: 0.20 lx, B/W: 0.1 lx (F1.2, View-DR OFF, XDNR ON-Middle, VE OFF, AGC High)	Color: 0.7 lx, B/W: 0 lx (IR illuminator ON) (F1.2, AGC 42 dB)	Color: 0.5 lx, B/W: 0 lx (IR illuminator ON) (F1.2, AGC 42 dB)	Color: 0.7 lx, B/W: 0.45 lx (F1.2, AGC 42 dB)	Color: 0.5 lx, B/W: 0.3 lx (F1.2, AGC 42 dB)	Color: 0.47 lx, B/W: 0.27 lx (F1.0, AGC ON)	2.0 lx (AGC 38 dB)	5.0 lx (AGC 30 dB)
Maximum Frame Rate	30 fps (H.264)/20 fps (MPEG-4)/16 fps (JPEG) at 1920 x 1080	30 fps (H.264/MPEG-4/ JPEG) at 1280 x 720	30 fps (H.264)/20 fps (MPEG-4)/16 fps (JPEG) at 1920 x 1080	30 fps (H.264/MPEG-4/ JPEG) at 1280 x 720	30 fps (H.264)/20 fps (MPEG-4)/16 fps (JPEG) at 1920 x 1080	30 fps (H.264/MPEG-4/ JPEG) at 1280 x 720	30 fps (H.264)/20 fps (MPEG-4)/16 fps (JPEG) at 1920 x 1080	30 fps (H.264/MPEG-4/ JPEG) at 1280 x 720	30 fps (H.264/MPEG-4/ JPEG)	30 fps (H.264/MPEG-4/ JPEG) at 1280 x 720, 15 fps (H.264/MPEG-4/ JPEG) at 1920 x 1080	30 fps (H.264/MPEG-4/ JPEG) at 1280 x 720
Day/Night	True D/N				True D/N					Electrical D/N	
Noise Reduction	XDNR® Technology				Yes					Yes	
Image Stabilizer	No				No					No	
Edge Storage	Yes				No					No	
Card Slot	CF card				No					No	
Wireless Network	Yes (option)				No					No	
Analog Video/Monitor Output	Yes				Yes/for setup only					Yes/for setup only	
Analytics Architecture	DEPA Advanced				DEPA					DEPA	
Audio Capability	Yes, 2-way Audio				No					No	
ONVIF Conformance	Profile S				Profile S					Profile S	
Power Requirements	IEEE 802.3af compliant (PoE system), AC 24 V, DC 12 V				IEEE802.3af compliant (PoE system)					IEEE802.3af compliant (PoE system)	
Power Consumption	33 W max.	30 W max.	11.2 W max.	9 W max.	12.9 W max.		5 W max.			2.4 W max.	
Operating Temperature	-22°F to +122°F (-30°C to +50°C) for 24VAC/12VDC		14°F to 122°F (-10°C to +50°C)		-22F° to +122F° (-30°C to +50°C) for 24VAC/12VDC		14°F to 122°F (-10°C to +50°C)			32°F to 122°F (0°C to +50°C)	
Dimensions	ø3 3/4 x 7 3/8 inches (ø93 X 186 MM)		ø2 7/8 x 2 1/2 x 7 3/4 inches (ø72 x 63 x 197.3 mm) with lens	2 7/8 x 2 1/2 x 7 7/8 inches (72 X 63 X 197 mm) with lens	ø3 3/4 x 7 3/8 inches (ø93 x 186 mm)		ø2 7/8 x 2 1/2 x 7 3/4 inches (ø72 x 63 x 197.3 mm) with lens	2 7/8 x 2 1/2 x 7 7/8 inches (72 x 63 x 197 mm) with lens	2 7/8 x 2 1/2 x 7 7/8 inches (72 x 63 x 187.8 mm) with lens	ø1 3/4 x 3 3/4 inches (ø44 x 93 mm)	

(*1) Definition of HD: Vertical resolution of at least 720 pixels, and streaming capability of more than 30 fps at 1280 x 720 pixels.

All cameras in this chart comply with UL2044.

IP Mini Dome Cameras

Series Name	V Series with IPELA ENGINE EX					
Model Name	SNC-VM632R	SNC-VM602R	SNC-VM631	SNC-VM601	SNC-VM630	SNC-VM600
Video Compression Format	H.264 (High/Main/Baseline Profile)/JPEG					
Multi Streaming Capability	Triple streaming					
Computer Display Format	Full HD 1080	HD (*1)	Full HD 1080	HD (*1)	Full HD 1080	HD (*1)
Maximum Resolution	1920 x 1080	1280 x 1024	1920 x 1080	1280 x 1024	1920 x 1080	1280 x 1024
IR Illuminators	Yes		No			
Built-in Speaker and Microphone	No					
Outdoor Use/Ingress Protection	Yes/IP66		No			
Vandal Resistant	IK10				No	
Horizontal Viewing Angle	105.2° to 35.4°	93.0° to 31.6°	105.2° to 35.4°	93.0° to 31.6°	105.2° to 35.4°	93.0° to 31.6°
Zoom Ratio	3.0x optical zoom					
Focal Length	f=3.0 mm to 9.0 mm					
Lens	Built-in varifocal lens					
Image Sensor	1/2.9-type progressive scan Exmor CMOS sensor	1/3-type progressive scan Exmor CMOS sensor	1/2.9-type progressive scan Exmor CMOS sensor	1/3-type progressive scan Exmor CMOS sensor	1/2.9-type progressive scan Exmor CMOS sensor	1/3-type progressive scan Exmor CMOS sensor
Tone Correction	Visibility Enhancer (VE)					
Wide Dynamic Range	Equivalent to 90 dB with View-DR technology	Equivalent to 130 dB with View-DR technology	Equivalent to 90 dB with View-DR technology	Equivalent to 130 dB with View-DR technology	Equivalent to 90 dB with View-DR technology	Equivalent to 130 dB with View-DR technology
Minimum Illumination (50 IRE)	Color: 0.1 lx (F1.2, View-DR OFF, VE OFF, AGC ON, 1/30 s, 30 fps) B/W: 0 lx (IR illuminator ON)	Color: 0.05 lx (F1.2, View-DR OFF, VE OFF, AGC ON, 1/30 s, 30 fps) B/W: 0 lx (IR illuminator ON)	Color: 0.1 lx, B/W: 0.07 lx (F1.2, View-DR OFF, VE OFF, AGC ON, 1/30 s, 30 fps)	Color: 0.05 lx, B/W: 0.04 lx (F1.2, View-DR OFF, VE OFF, AGC ON, 1/30 s, 30 fps)	Color: 0.1 lx, B/W: 0.07 lx (F1.2, View-DR OFF, VE OFF, AGC ON, 1/30 s, 30 fps)	Color: 0.05 lx, B/W: 0.04 lx (F1.2, View-DR OFF, VE OFF, AGC ON, 1/30 s, 30 fps)
Maximum Frame Rate	60 fps (H.264) at 1920 x 1080, 60 fps (JPEG) at 1280 x 720	60 fps (H.264/JPEG) at 1280 x 1024	60 fps (H.264) at 1920 x 1080, 60 fps (JPEG) at 1280 x 720	60 fps (H.264/JPEG) at 1280 x 1024	60 fps (H.264) at 1920 x 1080, 60 fps (JPEG) at 1280 x 720	60 fps (H.264/JPEG) at 1280 x 1024
Day/Night	True D/N					
Noise Reduction	XDNR® Technology					
Image Stabilizer	Yes					
Edge Storage	Yes					
Card Slot	SD card					
Wireless Network	No					
Analog Video/Monitor Output	Yes					
Audio Capability	Yes, 2-way Audio					
ONVIF Conformance	Profile S					
Power Requirements	IEEE 802.3at compliant (PoE/PoE+ system), AC 24V, DC 12V		IEEE802.3af compliant (PoE system), AC 24 V, DC 12 V			
Power Consumption	Max. 22 W (AC 24 V/DC 12 V, heater ON) Max. 18 W (IEEE802.3at (PoE+), heater ON) Max. 12.8 W (IEEE802.3af/at (PoE/PoE+), heater OFF)		6.0 W max.			
Operating Temperature	-40°F to 140°F (*2) (-40°C to +60°C) (*2)		14°F to 122°F (-10°C to +50°C)			
Dimensions	ø6 5/8 x 5 1/8 inches (ø166 x 128 mm)		ø5 7/8 x 4 3/8 inches (ø148 x 109 mm)			

(*1) Definition of HD: Vertical resolution of at least 720 pixels, and streaming capability of more than 30 fps at 1280 x 720 pixels.
(*2) If the camera is installed in high-temperature environments and subjected to direct sunlight, it is highly recommended to use the optional SNCA-WP602 Weather Protector.

All cameras in this chart comply with UL2044.

IP Mini Dome Cameras

Series Name	E Series with IPELA ENGINE EX						X Series with IPELA ENGINE EX				H Series
Model Name	SNC-EM632RC	SNC-EM602RC	SNC-EM631	SNC-EM601	SNC-EM630	SNC-EM600	SNC-XM632	SNC-XM636	SNC-XM637	SNC-XM631	SNC-HM662
Video Compression Format	H.264 (High/Main/Baseline Profile)/JPEG						H.264 (High/Main/Baseline Profile)/JPEG				H.264 (High/Main/ Baseline Profile)/JPEG
Multi Streaming Capability	Triple streaming						Triple streaming				Triple streaming
Computer Display Format	Full HD 1080	HD (*1)	Full HD 1080	HD (*1)	Full HD 1080	HD (*1)	Full HD 1080				5MP
Maximum Resolution	1920 x 1080	1280 x 1024	1920 x 1080	1280 x 1024	1920 x 1080	1280 x 1024	1920 x 1080				2560 x 1920
IR Illuminators	Yes		No				No				No
Built-in Speaker and Microphone	No						Yes (built-in microphone)			No	Yes (built-in microphone)
Outdoor Use/Ingress Protection	Yes/IP66		No				Yes/IP66			No	Yes/IP66
Vandal Resistant	IK10				No		IK10				IK10
Horizontal Viewing Angle	105.2° to 35.4°	93.0° to 31.6°	105.2° to 35.4°	93.0° to 31.6°	105.2° to 35.4°	93.0° to 31.6°	113°	83°	113°		182°
Zoom Ratio	3.0x optical zoom						4x digital zoom				12x digital zoom
Focal Length	f=3.0 mm to 9.0 mm						f = 2.8 mm	f = 3.8 mm	f = 2.8 mm		f= 0.98 mm to 1.12 mm
Lens	Built-in varifocal lens						Fixed lens				Fixed lens
Image Sensor	1/2.9-type progressive scan Exmor CMOS sensor	1/3-type progressive scan Exmor CMOS sensor	1/2.9-type progressive scan Exmor CMOS sensor	1/3-type progressive scan Exmor CMOS sensor	1/2.9-type progressive scan Exmor CMOS sensor	1/3-type progressive scan Exmor CMOS sensor	1/2.9-type progressive scan Exmor CMOS sensor				1/2.5-type progressive scan CMOS sensor
Tone Correction	Visibility Enhancer (VE)						Visibility Enhancer (VE)				Yes
Wide Dynamic Range	Equivalent to 90 dB with View-DR technology	Equivalent to 130 dB with View-DR technology	Equivalent to 90 dB with View-DR technology	Equivalent to 130 dB with View-DR technology	Equivalent to 90 dB with View-DR technology	Equivalent to 130 dB with View-DR technology	Equivalent to 90 dB with View-DR technology				More than 60 dB
Minimum Illumination (50 IRE)	Color: 0.1 lx (F1.2, View-DR OFF, VE OFF, AGC ON, 1/30 s, 30 fps) B/W: 0 lx (IR illuminator ON)	Color: 0.05 lx (F1.2, View-DR OFF, VE OFF, AGC ON, 1/30 s, 30 fps) B/W: 0 lx (IR illuminator ON)	Color: 0.1 lx, B/W: 0.07 lx (F1.2, View-DR OFF, VE OFF, AGC ON, 1/30 s, 30 fps)	Color: 0.05 lx, B/W: 0.04 lx (F1.2, View-DR OFF, VE OFF, AGC ON, 1/30 s, 30 fps)	Color: 0.1 lx, B/W: 0.07 lx (F1.2, View-DR OFF, VE OFF, AGC ON, 1/30 s, 30 fps)	Color: 0.05 lx, B/W: 0.04 lx (F1.2, View-DR OFF, VE OFF, AGC ON, 1/30 s, 30 fps)	Color: 0.3 lx, B/W: 0.3 lx (F2.0, View-DR OFF, VE OFF, AGC ON, 1/30 s, 30 fps)				Color: 0.7 lx, B/W: 0.01 lx (F2.0, AGC ON, 1/30 s, 10 fps)
Maximum Frame Rate	30 fps (H.264) at 1920 x 1080, 30 fps (JPEG) at 1280 x 720	30 fps (H.264/JPEG) at 1280 x 1024	30 fps (H.264/JPEG) at 1920 x 1080	30 fps (H.264/JPEG) at 1280 x 1024	30 fps (H.264/JPEG) at 1920 x 1080	30 fps (H.264/JPEG) at 1280 x 1024	30 fps (H.264/JPEG) at 1920 x 1080				30 fps (H.264/JPEG) at 1920 x 1080 13 fps (JPEG)/10 fps (H.264) at 2560 x 1920
Day/Night	True D/N						Electrical D/N				True D/N
Noise Reduction	XDNR® Technology						XDNR® Technology				No
Image Stabilizer	Yes						Yes				No
Edge Storage	No						Yes				Yes
Card Slot	No						SD Card				micro SD card
Wireless Network	No						No				No
Analog Video/Monitor Output	Yes/for setup only						No				No
Analytics Architecture	No						DEPA Advanced				No
Audio Capability	No						Yes			No	Yes
Alarm I/O	No						No			Yes(1/1)	Yes(1/1)
ONVIF Conformance	Profile S						Profile S				Profile S
Power Requirements	IEEE 802.3at compliant (PoE/PoE+ system)		IEEE 802.3af compliant (PoE system)				IEEE 802.3af compliant (PoE system)				IEEE 802.3af compliant (PoE system), DC 12 V
Power Consumption	Max. 17 W (IEEE802.3at-compliant (PoE+ system) Max. 12.95 W (IEEE802.3af/at-compliant (PoE/PoE+ system)		6.0 W max.				Max. 10.0 W (heater ON) Max. 3.8 W (heater OFF) equivalent to PoE Class 1, RJ45 Connector	Max. 10.0 W (heater ON) Max. 3.8 W (heater OFF) equivalent to PoE Class 1, M12 Connector		4.0 W max.	6.0 W max.
Operating Temperature	-40°F to +122°F (-40°C to +50°C) (PoE+) (*2) -22°F to +122°F (-30°C to +50°C) (PoE) (*2)		14°F to 122°F (-10°C to +50°C)				-13°F to +122°F (-25°C to +50°C)			14°F to 122°F (-10°C to +50°C)	-22°F to +122°F (-30°C to +50°C)
Dimensions	ø16 5/8 x 5 1/8 inches (ø166 x 129 mm)		ø5 7/8 x 4 3/8 inches (ø148 x 108 mm)				Approx. ø 1/2 x 1 27/32 inches (ø114 x 47 mm)			ø4 1/8 x 2 1/4 inches (ø104.5 x 56.5 mm)	Approx. 5.71 x 5.71 x 1.43 inches (145 x 145 x 36.3 mm)

(*1) Definition of HD: Vertical resolution of at least 720 pixels, and streaming capability of more than 30 fps at 1280 x 720 pixels. (*2) If the camera is installed in high-temperature environments and subjected to direct sunlight, it is highly recommended to use the optional SNCA-WP602 Weather Protector.

All cameras in this chart comply with UL2044.

IP Mini Dome Cameras

Series Name	V Series						E Series	
Model Name	SNC-DH280	SNC-DH180	SNC-DH240T	SNC-DH140T	SNC-DH240	SNC-DH140	SNC-DH260	SNC-DH160
Video Compression Format	H.264/MPEG-4/JPEG						H.264/MPEG-4/JPEG	
Multi Streaming Capability	Dual streaming						Dual streaming	
Computer Display Format	Full HD 1080	HD (*1)	Full HD 1080	HD (*1)	Full HD 1080	HD (*1)	Full HD 1080	HD (*1)
Maximum Resolution	1920 x 1440	1280 x 1024	1920 x 1440	1280 x 1024	1920 x 1440	1280 x 1024	1920 x 1440	1280 x 1024
IR Illuminators	Yes		No				Yes	
Built-in Speaker and Microphone	No						No	
Outdoor Use/Ingress Protection	Yes/IP66		No				Yes/IP66	
Vandal Resistant	IK10				No		IK10	
Horizontal Viewing Angle	88.5° to 32.3°	85.4° to 31.2°	88.5° to 32.3°	85.4° to 31.2°	88.5° to 32.3°	85.4° to 31.2°	88.5° to 32.3°	85.4° to 31.2°
Zoom Ratio	2.9x optical zoom						2.9x optical zoom	
Focal Length	f = 3.1mm to 8.9 mm						f=3.1 mm to 8.9 mm	
Lens	Built-in varifocal lens						Built-in varifocal lens	
Image Sensor	1/2.8-type progressive scan Exmor CMOS sensor	1/3-type progressive scan Exmor CMOS sensor	1/2.8-type progressive scan Exmor CMOS sensor	1/3-type progressive scan Exmor CMOS sensor	1/2.8-type progressive scan Exmor CMOS sensor	1/3-type progressive scan Exmor CMOS sensor	1/2.8-type progressive scan Exmor CMOS sensor	1/3-type progressive scan Exmor CMOS sensor
Tone Correction	Visibility Enhancer (VE)						No	
Wide Dynamic Range	Equivalent to 90 dB with View-DR technology	Equivalent to 130 dB with View-DR technology	Equivalent to 90 dB with View-DR technology	Equivalent to 130 dB with View-DR technology	Equivalent to 90 dB with View-DR technology	Equivalent to 130 dB with View-DR technology	More than 60 dB	
Minimum Illumination (50 IRE)	Color: 0.40 lx, B/W: 0 lx (IR illuminator ON) (F1.2, View-DR OFF, XDNR ON-Middle, VE OFF, AGC High)	Color: 0.22 lx, B/W: 0 lx (IR illuminator ON) (F1.2, View-DR OFF, XDNR ON-Middle, VE OFF, AGC High)	Color: 0.40 lx, B/W: 0.25 lx (F1.2, View-DR OFF, XDNR ON-Middle, VE OFF, AGC High)	Color: 0.20 lx, B/W: 0.10 lx (F1.2, View-DR OFF, XDNR ON-Middle, VE OFF, AGC High)	Color: 0.40 lx, B/W: 0.25 lx (F1.2, View-DR OFF, XDNR ON-Middle, VE OFF, AGC High)	Color: 0.20 lx, B/W: 0.10 lx (F1.2, View-DR OFF, XDNR ON-Middle, VE OFF, AGC High)	Color: 0.7 lx, B/W: 0 lx (IR illuminator ON) (F1.2, AGC 42 dB)	Color: 0.5 lx, B/W: 0 lx (IR illuminator ON) (F1.2, AGC 42 dB)
Maximum Frame Rate	30 fps (H.264)/20 fps (MPEG-4)/ 16 fps (JPEG) at 1920 x 1080	30 fps (H.264/MPEG-4/JPEG) at 1280 x 720	30 fps (H.264)/20 fps (MPEG-4)/ 16 fps (JPEG) at 1920 x 1080	30 fps (H.264/MPEG-4/JPEG) at 1280 x 720	30 fps (H.264)/20 fps (MPEG-4)/ 16 fps (JPEG) at 1920 x 1080	30 fps (H.264/MPEG-4/JPEG) at 1280 x 720	30 fps (H.264)/20 fps (MPEG-4)/ 16 fps (JPEG) at 1920 x 1080	30 fps (H.264/MPEG-4/JPEG) at 1280 x 720
Day/Night	True D/N						True D/N	
Noise Reduction	XDNR® Technology						Yes	
Image Stabilizer	No						No	
Edge Storage	No						No	
Card Slot	No						No	
Wireless Network	No						No	
Analog Video/Monitor Output	Yes						Yes / for setup only	
Audio Capability	Yes, 2-way Audio						No	
ONVIF Conformance	Yes						Yes	
Power Requirements	IEEE 802.3af compliant (PoE system), AC 24 V, DC 12 V						IEEE802.3af compliant (PoE system)	
Power Consumption	29 W max.	28 W max.	10.2 W max.	8.0 W max.	10.2 W max.	8.0 W max.	12.9 W max.	
Operating Temperature	-22°F to +122°F (-30°C to +50°C) for AC 24 V/DC 12 V, 14°F to 122°F (-10°C to +50°C) for PoE		14°F to 122°F (-10°C to +50°C)				-22 to +122°F (-30 to +50°C)	
Dimensions	ø6 5/8 x 4 3/4 inches (ø166 x 119 mm)		ø5 5/8 x 4 3/4 inches (ø140 x 119 mm)		ø5 5/8 x 4 3/4 inches (ø140 x 118 mm)		ø6 5/8 x 4 3/4 inches (ø166 x 119 mm)	

(*1) Definition of HD: Vertical resolution of at least 720 pixels, and streaming capability of more than 30 fps at 1280 x 720 pixels.

All cameras in this chart comply with UL2044.

IP Mini Dome Cameras

Series Name	E Series						X Series			
Model Name	SNC-DH220T	SNC-DH120T	SNC-EM521	SNC-DH220	SNC-DH120	SNC-EM520	SNC-DH210T	SNC-DH110T	SNC-DH210	SNC-DH110
Video Compression Format	H.264/MPEG-4/JPEG						H.264/MPEG-4/JPEG			
Multi Streaming Capability	Dual streaming						Dual streaming			
Computer Display Format	Full HD 1080	HD (*1)	SD	Full HD 1080	HD (*1)	SD	Full HD 1080	HD (*1)	Full HD 1080	HD (*1)
Maximum Resolution	1920 x 1440	1280 x 1024	800 x 600	1920 x 1440	1280 x 1024	800 x 600	2048 x 1536	1280 x 960	2048 x 1536	1280 x 960
IR Illuminators	No						No			
Built-in Speaker and Microphone	No						No			
Outdoor Use/Ingress Protection	No						No			
Vandal Resistant	IK10			No			IK10		No	
Horizontal Viewing Angle	88.5° to 32.3°	85.4° to 31.2°		88.5° to 32.3°	85.4° to 31.2°		86°	79°	88°	80.7°
Zoom Ratio	2.9x optical zoom						NA			
Focal Length	f=3.1 mm to 8.9 mm						f = 3.3 mm	f = 2.34 mm	f = 3.3 mm	f = 2.34 mm
Lens	Built-in varifocal lens						Built-in fixed focal lens			
Image Sensor	1/2.8-type progressive scan Exmor CMOS sensor	1/3-type progressive scan Exmor CMOS sensor		1/2.8-type progressive scan Exmor CMOS sensor	1/3-type progressive scan Exmor CMOS sensor		1/2.8-type progressive scan Exmor CMOS sensor	1/3.8-type progressive scan CMOS sensor	1/2.8-type progressive scan Exmor CMOS sensor	1/3.8-type progressive scan CMOS sensor
Tone Correction	No						No			
Wide Dynamic Range	More than 60 dB						NA			
Minimum Illumination (50 IRE)	Color: 0.7 lx, B/W: 0.45 lx (F1.2, AGC 42 dB)	Color: 0.5 lx, B/W: 0.3 lx (F1.2, AGC 42 dB)		Color: 0.7 lx, B/W: 0.45 lx (F1.2, AGC 42 dB)	Color: 0.5 lx, B/W: 0.3 lx (F1.2, AGC 42 dB)		2.3 lx (AGC 38 dB)	5.5 lx (AGC 30 dB)	2.0 lx (AGC 38 dB)	5.0 lx (AGC 30 dB)
Maximum Frame Rate	30 fps (H.264)/20 fps (MPEG-4)/16 fps (JPEG) at 1920 x 1080	30 fps (H.264/MPEG-4/JPEG) at 1280 x 720		30 fps (H.264)/20 fps (MPEG-4)/16 fps (JPEG) at 1920 x 1080	30 fps (H.264/MPEG-4/JPEG) at 1280 x 720		30 fps (H.264/MPEG-4/JPEG) at 1280 x 720, 15 fps (H.264/MPEG-4/JPEG) at 1920 x 1080	30 fps (H.264/MPEG-4/JPEG) at 1280 x 960/720	30 fps (H.264/MPEG-4/JPEG) at 1280 x 720, 15 fps (H.264/MPEG-4/JPEG) at 1920 x 1080	30 fps (H.264/MPEG-4/JPEG) at 1280 x 960/720
Day/Night	True D/N						Electrical D/N			
Noise Reduction	Yes						Yes			
Image Stabilizer	No						No			
Edge Storage	No						No			
Card Slot	No						No			
Wireless Network	No						No			
Analog Video/Monitor Output	Yes / for setup only						Yes / for setup only			
Audio Capability	No						No			
ONVIF Conformance	Yes						Yes			
Power Requirements	IEEE802.3af compliant (PoE system)						IEEE802.3af compliant (PoE system)			
Power Consumption	6.0 W max.						2.4 W max.			
Operating Temperature	14°F to 122°F (-10°C to +50°C)						32°F to 122°F (0°C to +50°C)			
Dimensions	ø5 5/8 x 4 3/4 inches (ø140 x 119 mm)			ø5 5/8 x 4 3/4 inches (ø140 x 118 mm)			ø4 1/4 x 2 1/4 inches (ø106 x 56.5 mm)		ø4 1/4 x 2 inches (ø106 x 50.5 mm)	

(*1) Definition of HD: Vertical resolution of at least 720 pixels, and streaming capability of more than 30 fps at 1280 x 720 pixels.

All cameras in this chart comply with UL2044.

IP Rapid Dome and PTZ Cameras

P/T/Z: PAN/TILT/ZOOM

Series Name	W Series with IPELA ENGINE PRO			
Model Name	SNC-WR632C	SNC-WR602C	SNC-WR630	SNC-WR600
Video Compression Format	H.264 (High/Main/Baseline Profile)/JPEG			
Multi Streaming Capability	Triple streaming			
Computer Display Format	Full HD 1080	HD (*1)	Full HD 1080	HD (*1)
Maximum Resolution	1920 x 1080	1280 x 720	1920 x 1080	1280 x 720
Outdoor Use/Ingress Protection	Yes/IP66		No	
Vandal Resistant	IK10		No	
Horizontal Viewing Angle	63.7° to 2.3°	58.3° to 2.1°	63.7° to 2.3°	58.3° to 2.1°
Zoom Ratio	30x optical zoom			
Focal Length	f = 4.3 mm to 129.0 mm			
Lens	Auto-focus zoom lens			
Image Sensor	1/2.8-type progressive scan Exmor CMOS sensor	1/3-type progressive scan Exmor CMOS sensor	1/2.8-type progressive scan Exmor CMOS sensor	1/3-type progressive scan Exmor CMOS sensor
Tone Correction	Visibility Enhancer (VE)			
Wide Dynamic Range	Equivalent to 130 dBwith View-DR technology (30 fps)			
Minimum Illumination (50 IRE)	Color: 0.4 lx, B/W: 003. lx (F1.6, View-DR OFF, VE OFF, AGC ON, 1/30 s, 30 fps)	Color: 0.2 lx, B/W: 0.015 lx (F1.6, View-DR OFF, VE OFF, AGC ON, 1/30 s, 30 fps)	Color: 0.4 lx, B/W: 003. lx (F1.6, View-DR OFF, VE OFF, AGC ON, 1/30 s, 30 fps)	Color: 0.2 lx, B/W: 0.015 lx (F1.6, View-DR OFF, VE OFF, AGC ON, 1/30 s, 30 fps)
Maximum Frame Rate	60 fps (H.264/JPEG) at 1920 x 1080	60 fps (H.264/JPEG) at 1280 x 720	60 fps (H.264/JPEG) at 1920 x 1080	60 fps (H.264/JPEG) at 1280 x 720
Day/Night	True D/N			
Noise Reduction	XDNR® Technology			
Image Stabilizer	Gyroscopic Image Stabilizer			
Defog Image Processing	Yes			
Edge Storage	Yes			
Card Slot	SD card			
Wireless Network	No			
Analog Video/Monitor Output	Yes			
Rapid Dome or PTZ	Rapid Dome			
Pan/Tilt Angle (Mechanical)	360° endless rotation/220°			
Pan Speed	700°/s (max.)			
Analytics Architecture	DEPA Advanced			
Audio Capability	Yes, 2-way Audio			
ONVIF Conformance	Profile S			
Power Requirements	HPoE+, AC 24 V		IEEE802.3at compliant (HPoE system), AC 24 V, DC 12 V	
Power Consumption	Max. 30.0 W (AC 24 V/HPoE+, Heater OFF) (*3) Max. 80.0 W (AC 24 V, Heater ON) Max. 55.0 W (HPoE+, Heater ON) (*3)		25 W max.	
Operating Temperature	AC 24V: -40°F to +122°F (-40°C to +50°C) HPoE+: -22°F to 122°F (-30°C to +50°C) (*3)		23°F to 122°F (-5°C to +50°C)	
Dimensions WHD	ø8 3/4 x 12 7/8 inches (ø222.0 X 324.1 mm)		ø5 7/8 x 8 1/8 inches (ø146.3 x 205.0 mm)	

(*1) Definition of HD: Vertical resolution of at least 720 pixels, and streaming capability of more than 30 fps at 1280 x 720 pixels.
(*2) When using DynaView technology, the maximum frame rate becomes 15 fps.
(*3) Power supply is generated from PowerDsine® 9501G/B by using 4 wires.
Definition of Rapid Dome: 360 degree endless rotation. Definition of Pan Tilt Zoom: 340 degrees.

All cameras in this chart comply with UL2044.

IP Rapid Dome and PTZ Cameras

P/T/Z: PAN/TILT/ZOOM

Series Name	E Series (Rapid Dome PTZ)									
Model Name	SNC-ER585	UNI-ONER580C7	UNI-ONER550C7	UNI-ONER520C7	UNI-ONER580C2	UNI-ONER550C2	UNI-ONER520C2	SNC-ER580	SNC-ER550	SNC-ER520
Video Compression Format	H.264/MPEG-4/JPEG									
Multi Streaming Capability	Dual streaming									
Computer Display Format	Full HD 1080		HD (*1)	SD	Full HD 1080	HD (*1)	SD	Full HD 1080	HD (*1)	SD
Maximum Resolution	1920 x 1080		1280 x 720	720 x 480	1920 x 1080	1280 x 720	720 x 480	1920 x 1080	1280 x 720	720 x 480
Outdoor Use/Ingress Protection	Yes/IP66							No		
Vandal Resistant	IK10	No						No		
Horizontal Viewing Angle	59.5° to 2.1°	55.4° to 2.9°		57.8° to 1.7°	55.4° to 2.9°	55.9° to 2.1°	57.8° to 1.7°	55.4° to 2.9°	55.9° to 2.1°	57.8° to 1.7°
Zoom Ratio	30x optical zoom	20x optical zoom	28x optical zoom	36x optical zoom	20x optical zoom	28x optical zoom	36x optical zoom	20x optical zoom	28x optical zoom	36x optical zoom
Focal Length	f = 4.3 mm to 129.0 mm	f = 4.7 mm to 94.0 mm	f = 3.5 mm to 98 mm	f = 3.4 mm to 122.4 mm	f = 4.7 mm to 94.0 mm	f = 3.5 mm to 98 mm	f = 3.4 mm to 122.4 mm	f = 4.7 mm to 94.0 mm	f = 3.5 mm to 98 mm	f = 3.4 mm to 122.4 mm
Lens	Auto-focus zoom lens		No		Auto-focus zoom lens	No		Auto-focus zoom lens		
Image Sensor	1/2.8-type progressive scan Exmor CMOS sensor		1/4-type progressive scan Exmor CMOS sensor	1/4-type EXview HAD CCD	1/2.8-type progressive scan Exmor CMOS sensor	1/4-type progressive scan Exmor CMOS sensor	1/4-type EXview HAD CCD	1/2.8-type progressive scan Exmor CMOS sensor	1/4-type progressive scan Exmor CMOS sensor	1/4-type EXview HAD CCD
Tone Correction	No									
Wide Dynamic Range	86 dB (theoretical) with DynaView technology									
Minimum Illumination (50 IRE)	Color: 1.7 lx, B/W: 0.3 lx (F1.6, AGC ON, 1/30 s)		Color: 1.0 lx, B/W: 0.1 lx (F1.35, AGC ON, 1/30 s)	Color: 1.4 lx, B/W: 0.15 lx (F1.6, AGC ON, 1/60 s/1/50 s)	Color: 1.7 lx, B/W: 0.3 lx (F1.6, AGC ON, 1/30 s)	Color: 1.0 lx, B/W: 0.1 lx (F1.35, AGC ON, 1/30 s)	Color: 1.4 lx, B/W: 0.15 lx (F1.6, AGC ON, 1/60 s/1/50 s)	Color: 1.7 lx, B/W: 0.3 lx (F1.6, AGC ON, 1/30 s)	Color: 1.0 lx, B/W: 0.1 lx (F1.35, AGC ON, 1/30 s)	Color: 1.4 lx, B/W: 0.15 lx (F1.6, AGC ON, 1/60 s/1/50 s)
Maximum Frame Rate	30 fps (H264)/20 fps (MPEG-4)/16 fps (JPEG) (*2) at 1920 x 1080		30 fps (H.264/MPEG-4/JPEG) at 1280 x 720	30 fps (H.264/MPEG-4/JPEG) (*2)	30 fps (H264)/20 fps (MPEG-4)/16 fps (JPEG) (*2) at 1920 x 1080	30 fps (H.264/MPEG-4/JPEG) at 1280 x 720	30 fps (H.264/MPEG-4/JPEG) (*2)	30 fps (H264)/20 fps (MPEG-4)/16 fps (JPEG) (*2) at 1920 x 1080	30 fps (H.264/MPEG-4/JPEG) at 1280 x 720	30 fps (H.264/MPEG-4/JPEG) (*2)
Day/Night	True D/N									
Noise Reduction	Yes									
Image Stabilizer	Yes	No								
Defog Image Processing	No									
Edge Storage	Yes									
Card Slot	SD/SDHC card									
Wireless Network	No									
Analog Video/Monitor Output	No									
Rapid Dome or PTZ	Rapid Dome									
Pan/Tilt Angle (Mechanical)	360° endless rotation/210° (15° above horizon)									
Pan Speed	300°/s (max.)									
Analytics Architecture	DEPA									
Audio Capability	Yes, 2-way Audio									
ONVIF Conformance	Profile S	Yes								
Power Requirements	AC 24 V	HPoE+ (60W) injector included			AC 24 V			IEEE 802.3at compliant (HPoE system), AC 24 V		IEEE 802.3at compliant (HPoE system), AC 24 V
Power Consumption	75 W max. (heater ON)/ 25 W max. (heater OFF)	60 W max.			52 W max.			25 W max.		25 W max.
Operating Temperature	-40°F to +140°F (-40°C to +60°C)	-20°F to +122°F (-30°C to +50°C)						23°F to 122°F (-5°C to +50°C)		23°F to 122°F (-5°C to +50°C)
Dimensions (WHD)	ø8 3/4 x 12 7/8 inches (ø222.0 x 323.9 mm)	11 1/2 x 2 1/2 x 11 1/2 inches (292.1 x 546.1 x 292.1 mm)						ø5 7/8 x 7 5/8 inches (ø147.4 x 190.9 mm)		ø5 7/8 x 7 5/8 inches (ø147.4 x 190.9 mm)

(*1) Definition of HD: Vertical resolution of at least 720 pixels, and streaming capability of more than 30 fps at 1280 x 720 pixels. (*2) When using DynaView technology, the maximum frame rate becomes 15 fps.
Definition of Rapid Dome: 360 degree endless rotation. Definition of Pan Tilt Zoom: 340 degrees.

All cameras in this chart comply with UL2044.

IP Rapid Dome and PTZ Cameras

P/T/Z: PAN/TILT/ZOOM

Series Name	E Series (PTZ)								
Model Name	UNI-ONEP580C7	UNI-ONEP550C7	UNI-ONEP520C7	UNI-ONEP580C2	UNI-ONEP550C2	UNI-ONEP520C2	SNC-EP580	SNC-EP550	SNC-EP520
Video Compression Format	H.264/MPEG-4/JPEG								
Multi Streaming Capability	Dual streaming								
Computer Display Format	Full HD 1080	HD (*1)	SD	Full HD 1080	HD (*1)	SD	Full HD 1080	HD (*1)	SD
Maximum Resolution	1920 x 1080	1280 x 720	720 x 480	1920 x 1080	1280 x 720	720 x 480	1920 x 1080	1280 x 720	720 x 480
Outdoor Use/Ingress Protection	Yes/IP66						No		
Vandal Resistant	No								
Horizontal Viewing Angle	55.4° to 2.9°	55.9° to 2.1°	57.8° to 1.7°	55.4° to 2.9°	55.9° to 2.1°	57.8° to 1.7°	55.4° to 2.9°	55.9° to 2.1°	57.8° to 1.7°
Zoom Ratio	20x optical zoom	28x optical zoom	36x optical zoom	20x optical zoom	28x optical zoom	36x optical zoom	20x optical zoom	28x optical zoom	36x optical zoom
Focal Length	f = 4.7 mm to 94.0 mm	f = 3.5 mm to 98 mm	f = 3.4 mm to 122.4 mm	f = 4.7 mm to 94.0 mm	f = 3.5 mm to 98 mm	f = 3.4 mm to 122.4 mm	f = 4.7 mm to 94.0 mm	f = 3.5 mm to 98 mm	f = 3.4 mm to 122.4 mm
Lens	No		Auto-focus zoom lens	No		Auto-focus zoom lens			
Image Sensor	1/2.8-type progressive scan Exmor CMOS sensor	1/4-type progressive scan Exmor CMOS sensor	1/4-type EXview HAD CCD	1/2.8-type progressive scan Exmor CMOS sensor	1/4-type progressive scan Exmor CMOS sensor	1/4-type EXview HAD CCD	1/2.8-type progressive scan Exmor CMOS sensor	1/4-type progressive scan Exmor CMOS sensor	1/4-type EXview HAD CCD
Tone Correction	No								
Wide Dynamic Range	86 dB (theoretical) with DynaView technology		92 dB (theoretical) with DynaView technology	86 dB (theoretical) with DynaView technology		92 dB (theoretical) with DynaView technology	86 dB (theoretical) with DynaView technology	86 dB (theoretical) with DynaView technology	92 dB (theoretical) with DynaView technology
Minimum Illumination (50 IRE)	Color: 1.7 lx, B/W: 0.3 lx (F1.6, AGC ON, 1/30 s)	Color: 1.0 lx, B/W: 0.1 lx (F1.35, AGC ON, 1/30 s)	Color: 1.4 lx, B/W: 0.15 lx (F1.6, AGC ON, 1/60 s/1/50 s)	Color: 1.7 lx, B/W: 0.3 lx (F1.6, AGC ON, 1/30 s)	Color: 1.0 lx, B/W: 0.1 lx (F1.35, AGC ON, 1/30 s)	Color: 1.4 lx, B/W: 0.15 lx (F1.6, AGC ON, 1/60 s/1/50 s)	Color: 1.7 lx, B/W: 0.3 lx (F1.6, AGC ON, 1/30 s)	Color: 1.0 lx, B/W: 0.1 lx (F1.35, AGC ON, 1/30 s)	Color: 1.4 lx, B/W: 0.15 lx (F1.6, AGC ON, 1/60 s/1/50 s)
Maximum Frame Rate	30 fps (H264)/20 fps (MPEG-4)/16 fps (JPEG) (*2) at 1920 x 1080	30 fps (H.264/MPEG-4/ JPEG) at 1280 x 720	30 fps/25 fps (H.264/MPEG-4/JPEG) (*2)	30 fps (H264)/20 fps (MPEG-4)/16 fps (JPEG) (*2) at 1920 x 1080	30 fps (H.264/MPEG-4/ JPEG) at 1280 x 720	30 fps/25 fps (H.264/MPEG-4/JPEG) (*2)	30 fps (H264)/20 fps (MPEG-4)/16 fps (JPEG) (*2) at 1920 x 1080	30 fps (H.264/MPEG-4/ JPEG) at 1280 x 720	30 fps/25 fps (H.264/MPEG-4/JPEG) (*2)
Day/Night	True D/N								
Noise Reduction	Yes								
Image Stabilizer	No								
Defog Image Processing	No								
Edge Storage	Yes								
Card Slot	SD/SDHC card								
Wireless Network	No								
Analog Video/Monitor Output	No								
Rapid Dome or PTZ	PTZ								
Pan/Tilt Angle (Mechanical)	340°/105° (15° above horizon)								
Pan Speed	300°/s (max.)								
Analytics Architecture	DEPA								
Audio Capability	Yes, 2-way Audio								
ONVIF Conformance	Yes								
Power Requirements	HPoE+ (60W) injector included			AC 24 V			IEEE 802.3at compliant (HPoE system), AC 24 V		
Power Consumption	60 W max			52 W max.			25 W max.		
Operating Temperature	-20°F to +122°F (-30°C to +50°C)						23°F to 122°F (-5°C to +50°C)		
Dimensions (WHD)	11 1/2 x 2 1/2 x 11 1/2 inches (292.1 x 546.1 x 292.1 mm)						ø5 7/8 x 7 5/8 inches (ø147.4 x 190.9 mm)		

(*1) Definition of HD: Vertical resolution of at least 720 pixels, and streaming capability of more than 30 fps at 1280 x 720 pixels. (*2) When using DynaView technology, the maximum frame rate becomes 15 fps.
Definition of Rapid Dome: 360 degree endless rotation. Definition of Pan Tilt Zoom: 340 degrees.

All cameras in this chart comply with UL2044.

Hybrid Camera Solutions

IPELA HYBRID™– Sony's IP and Analog-over-Coax Technology*1 – Offers Cost-effective Retrofit Solutions for Existing Analog CCTV Systems

Sony offers a new video surveillance technology that can simultaneously transmit both IP and analog signals on a single coaxial cable. It allows customers to easily migrate to HD IP video surveillance systems with minimal investment, utilizing their existing analog infrastructure. Based on this technology – IPELA HYBRID – Sony offers solutions comprised of hybrid cameras and a compatible SLOC device*2.

These unique solutions deliver the following advantages:

- Cost-effective surveillance systems that can be easily migrated from an analog CCTV system to an IP network-based system, making the most of any existing surveillance infrastructure (e.g. coaxial cables, local power supplies, matrix switchers, controllers, and video wall monitors)
- Simultaneous transmission of IP HD video and analog SD video (see diagram below)
- Utilization of the advanced features and functionalities offered by IP network cameras
- Maximum cable length of 1,000 feet (300 m) with an RG-59 coaxial cable*3
- Minimized latency of analog video and PTZ control for video monitoring

Sony's hybrid camera solutions can be used in a wide variety of surveillance applications, and in locations such as commercial facilities, financial institutions, office buildings, casinos, airports, government-related facilities, and schools.

*1 Sony's IP and analog-over-coax technology is developed based on Intersil Corporation's SLOC™ (Security Link Over Coax) technology.
*2 For information on SLOC-compatible devices, please contact your nearest Authorized Sony Reseller.
*3 Cable length varies according to cable grade and quality.

Hybrid Camera Solution from Sony

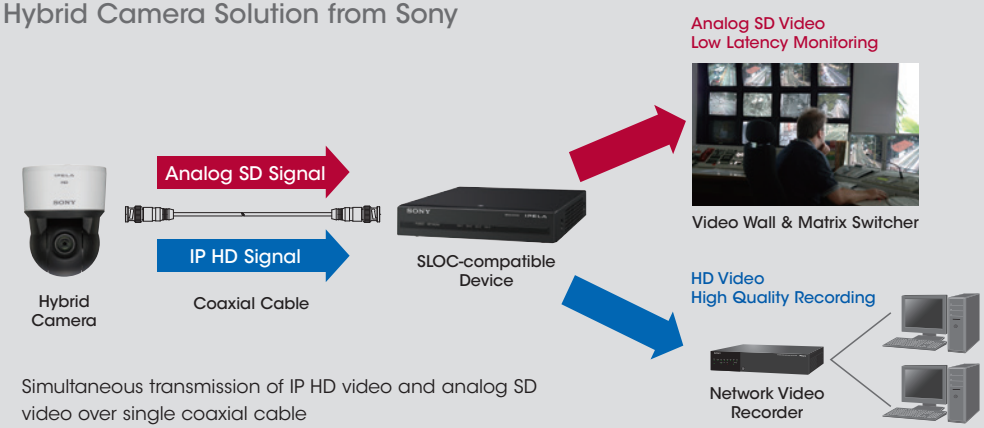

Simultaneous transmission of IP HD video and analog SD video over single coaxial cable

Simple Migration from Analog to IP

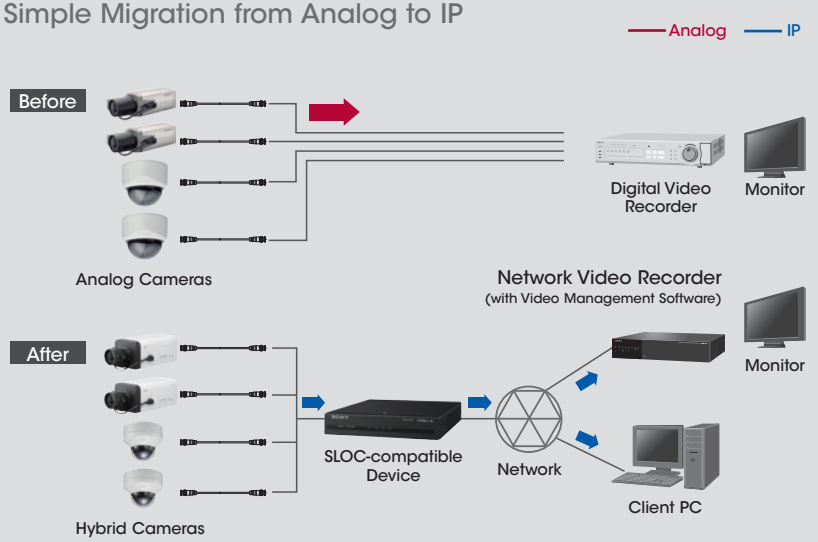

Hybrid Migration

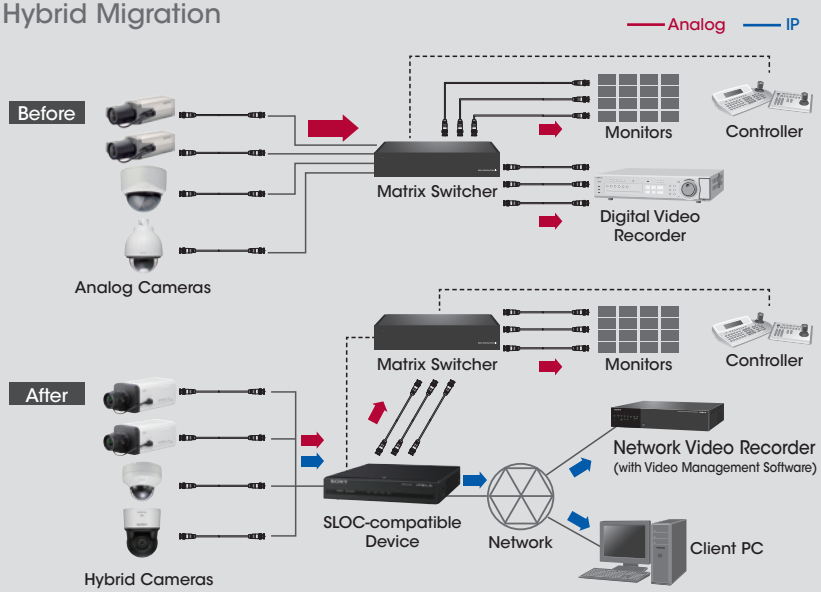

Hybrid Cameras

Series Name	Z Series				
Model Name	SNC-ZB550	SNC-ZM551	SNC-ZM550	SNC-ZR550	SNC-ZP550
	Hybrid Fixed HD Camera	Hybrid Vandal-resistant Mini Dome HD Camera	Hybrid Mini Dome HD Camera	Hybrid Rapid Dome HD Camera	Hybrid PTZ HD Camera
Video Compression Format	H.264/MPEG-4/JPEG				
Multi Streaming Capability	Dual streaming (*1)				
Computer Display Format	HD (*2)				
Maximum Resolution (IP)	1280 x 1024			1280 x 720	
Signal System	NTSC/PAL (switchable)				
Vandal Resistant	No	IK10	No		
Horizontal Viewing Angle	96.5° to 33.9°	85.4° to 31.2°		55.9° to 2.1°	
Zoom Ratio	2.9x optical zoom			28x optical zoom	
Focal Length	f=2.8 mm to 8 mm	f=3.1 mm to 8.9 mm		f=3.5 mm to 98 mm	
Lens	CS mount lens	Built-in varifocal lens		Auto-focus zoom lens	
Image Sensor	1/3-type progressive scan Exmor CMOS sensor			1/4-type progressive scan Exmor CMOS sensor	
Wide Dynamic Range	More than 60 dB			More than 60 dB with DynaView	
Minimum Illumination (50 IRE)	Color: 0.50 lx, B/W: 0.30 lx (F1.2, shutter 1/30 s, AGC 42 dB by IP)			Color: 1.0 lx, B/W: 0.10 lx (F1.35, AGC ON, shutter 1/30 s by IP)	
Maximum Frame Rate	30 fps (H.264/MPEG-4/JPEG) at 1280 x 720				
Day/Night	True D/N				
Noise Reduction	Yes				
Card Slot	No			SD/SDHC card	
Analog Video Output	Yes				
Rapid Dome or PTZ	No			Rapid Dome	PTZ
Pan/Tilt Angle (Powered)	No			360° endless rotation/210° (15 degrees above horizon)	340°/105° (15 degrees above horizon)
Pan Speed	No			300°/s (max.)	
Analytics Architecture	DEPA				
ONVIF Conformance	Yes				
Power Requirements	AC 24 V, DC 12 V			IEEE 802.3at compliant (HPoE system) (*3), AC 24 V	
Power Consumption	6 W max.	7 W max.		25 W max.	
Operating Temperature	14°F to 122°F (-10°C to +50°C)			23°F to 122°F (-5°C to +50°C)	
Dimensions	2 7/8 x 2 1/2 x 7 7/8 inches (72 x 63 x 197 mm)	ø5 5/8 x 4 3/4 inches (ø140 x 118 mm)		ø5 7/8 x 7 5/8 inches (ø147.4 x 190.9 mm)	

(*1) Dual streaming is not available when an analog video signal is output from the SLOC port.
(*2) Definition of HD: Vertical resolution of at least 720 pixels, and streaming capability of more than 30 fps at 1280 x 720 pixels.
(*3) HPoE is available when the camera is connected to HPoE-compatible equipment via an Ethernet cable.

All cameras in this chart comply with UL2044.

Hybrid Camera Receiver

Model Name	SNCA-ZX104
Camera Connection	
Number of Cameras Supported	4
Supported Serial PTZ Control Protocol	Pelco-D
Interface	
Network Port	100BASE-TX, 10BASE-T (RJ-45 x1)
Serial Interface	RS-485 x1 (I/O port for PTZ camera control)
SLOC Port	BNC x4 (75 Ω)
Analog Video Output	BNC x4 (1.0 Vp-p, 75 Ω, NTSC or PAL)
General	
Power Requirements	DC 12 V (AC 100 V to AC 240 V, 50/60 Hz for AC adaptor)
Power Consumption	Approx. 12.0 W Approx . 0.22 A/0.12 A (AC adaptor, AC 100 V to AC 240 V)
Dimensions (W x H x D)	Approx. 210 mm x 44 mm x 250 mm (without projecting parts) (Approx. 210 mm x 44 mm x 250 mm, without projecting parts)

Model name	Hybrid Receiver Rack Mount Kit
	RMM-ZX104
	19", 1U rack mount kit for the SMCA-ZX104. Two units can be installed side-by-side per rack kit. Made in USA.
Unit color	Black / Steel construction
Supplied Accessories	Eight (8) screws (4flat / 4 round head) to attach SNCA-ZX104 to the rack kit, and four (4) rack mount screws.
Optional Accessories	Rack mount clips are not included.
Dimensions (WHD)	19" x 1-3/4" x 12

IPELA HYBRID sloc™

Surveillance Video Encoders

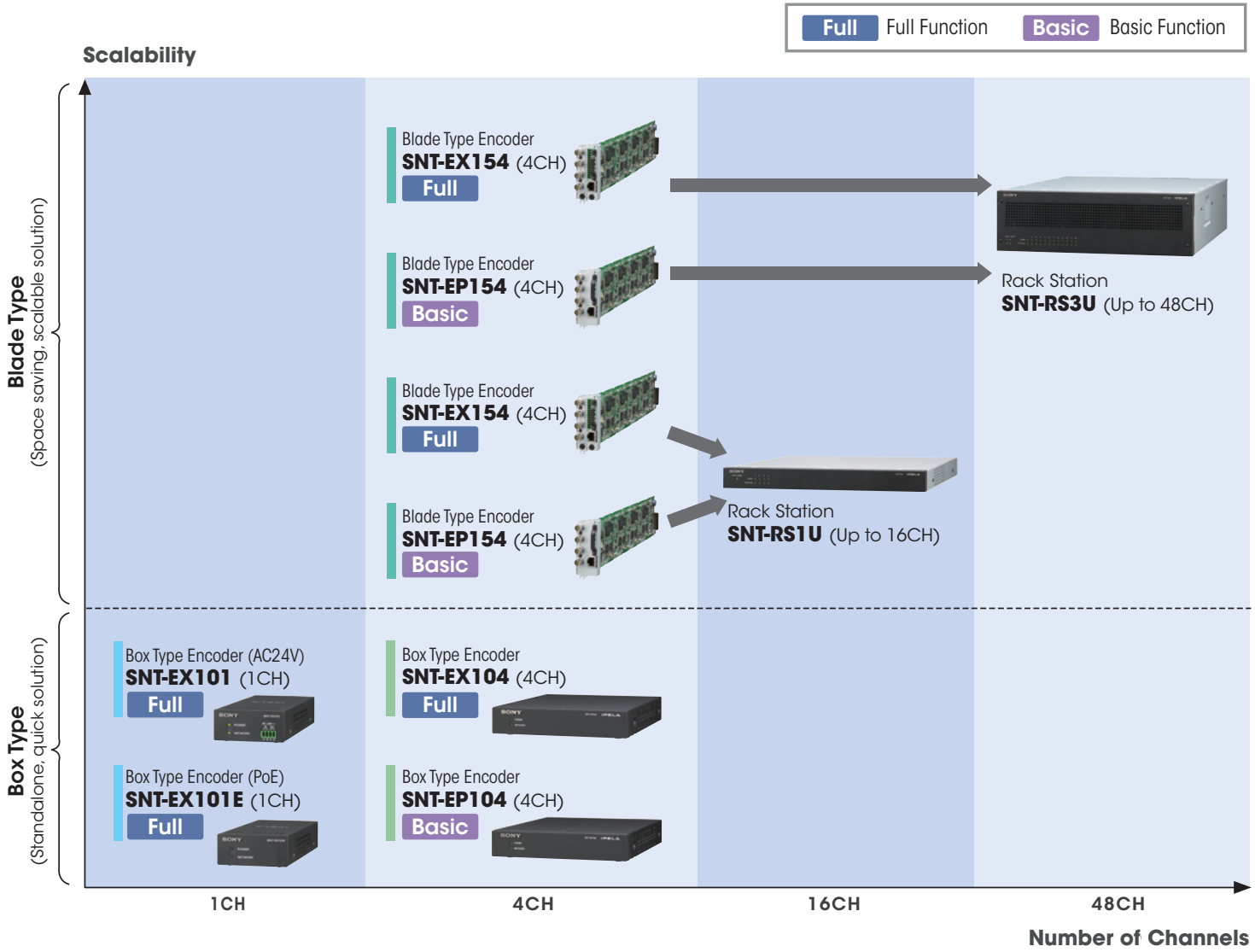

RACK STATION

SNT-RS1U
Accepts up to 4 blade encoders
(up to 16 ch)
Universal power capability
AC 100V - AC240V, 50/60 Hz

SNT-RS3U
Accepts up to 12 blade encoders
(up to 48 ch)
Universal power capability
AC 100V - AC240V, 50/60 Hz

OPTIONAL ACCESSORY

SNTA-RP1
Redundant Power Supply Unit
(for SNT-RS3U only)

Surveillance Video Encoders

	Full Function				Basic Function	
	1CH Box		4CH Box	4CH Blade	4CH Box	4CH Blade
	SNT-EX101	SNT-EX101E	SNT-EX104	SNT-EX154	SNT-EP104	SNT-EP154
Codec Image Size (HxV)	D1 (NTSC: 720 x 480) VGA (640 x 480), CIF (384 x 288), QVGA (320 x 240)		D1 (NTSC: 720 x 480) VGA (640 x 480), CIF (384 x 288), QVGA (320 x 240)		D1 (NTSC: 720 x 480) VGA (640 x 480), CIF (384 x 288), QVGA (320 x 240)	
Video Compression Format	H.264, MPEG-4, JPEG		H.264, MPEG-4, JPEG		H.264, MPEG-4, JPEG	
Multi Streaming Capability	Dual streaming (Any combination with JPEG/MPEG-4/H.264, including multiple streams of the same format)		Dual streaming (Any combination with JPEG/MPEG-4/H.264, including multiple streams of the same format)		Dual streaming (Any combination with JPEG/MPEG-4/H.264, including multiple streams of the same format)	
Maximum Frame Rate	H.264/MPEG-4/JPEG: 30 fps (NTSC: 720 x 480)		H.264/MPEG-4/JPEG: 30 fps (NTSC: 720 x 480)		H.264/MPEG-4/JPEG: 30 fps (NTSC: 720 x 480)	
PTZ Control	Yes		Yes		No	
Tone Correction	Visibility Enhancer (VE)		Visibility Enhancer (VE)		Visibility Enhancer (VE)	
Noise Reduction	XDNR® Technology		XDNR® Technology		XDNR® Technology	
Coaxitron Control	Yes		Yes		No	
Serial Interface	RS-422/RS-485		RS-485		-	
USB Slots	x 1 (*1)		x 4 (*1)	-	-	
Sensor Input	x 2		x 4		-	
Alarm Output	x 2		x 4		-	
Audio Interface (IN/OUT)	IN x 1, OUT x 1		IN x 4, OUT x 4	IN x 1, OUT x 1	-	
Audio Support	Full Duplex		Full Duplex		No	
Analytics Architecture	DEPA Advanced		DEPA Advanced		No	
ONVIF Conformance	Yes		Yes		Yes	
Dimensions (W x H x D)	2 7/8 ×1 3/8 × 6 1/8 inches (73 x 34 x 155 mm)		8 3/8 × 1 3/4 × 9 7/8 inches (210 x 44 x 250 mm)	3 1/8 × 1 3/8 × 15 1/8 inches (78 x 34 x 382 mm)	8 3/8 × 1 3/4 × 9 7/8 inches (210 x 44 x 250 mm)	3 1/8 × 1 3/8 × 15 1/8 inches (78 x 34 x 382 mm)
Power Requirements	AC 24 V in, with loop through output Input: AC 24 V, +/- 20%	PoE (Class 2)	DC12 V	From Rack Station	DC12 V	From Rack Station

(*1) USB slots are inside the chassis, not on the front or rear panels.

These products include software developed by the OpenSSL Project for use in the OpenSSL Toolkit. (http://www.openssl.org/)

All encoders in this chart comply with UL60950-1. (Except blades).

Network Surveillance Recording Servers

	NSR-500
Video/Recording	
Number of cameras supported	Max. 16 (Max. 24ch w/NSBK-CL05) (IP/Analog total)
Number of analog cameras	16, using optional (NSBK-EB05)
Video compression (IP camera)	H.264 / MPEG-4 / JPEG
Video compression (Analog camera)	Option (NSBK-EB05) H.264/JPEG
Recording frame rate	480fps (at H.264, Full-HD, 4Mbps)
Hard disk drives (Physical capacity)	Up to 12TB
Hard disk drives (RAID level)	RAID 0, 1, 10 (1+0), 5, 5+hot spare
Optical disc drive	No
Expansion storage	iSCSI storage (max. 16TB)
Video Output	
Monitor OUT 1	Analog RGB (D-sub 15-pin) x 1
Monitor OUT 2	No
Audio Output	
Audio OUT	Stereo mini jack x 1
Sensor Input/Alarm Output	
Sensor input	Compatible with DC3.3V to 24V, photo coupler input x 8 (insulated from main unit)
Alarm output	Max. DC 24V/ 1A, mechanical relay output x 8 (insulated from main unit)
Other Interfaces	
Ethernet	1000BASE-T/100BASE-TX/10BASE-T x 2
USB	USB2.0 x 2 (Front), USB2.0 x 2 (Rear)
Serial interface (for UPS)	RS-232C : D-sub 9-pin x 1
Serial interface (for analog camera control)	RS-232C : D-sub 9pin x 1, RS-422/485 x 1 (when installing NSBK-EB05) *1
General	
Dimensions (W x H x D)	17 3/8 x 3 1/2 x 15 1/2 inches (440 x 89 x 392mm) * excluding protrusions
Weight	Approx. 20 lb 12 oz (9.4Kg) (Without HDD model)
Power requirements	100V to 127V AC / 200V to 240V (50/60Hz)
Power consumption	max. 250W (100-240V 3.5-1.5A)
Operating temperature	41 to 104˚F (5 to 40˚C)
Operation humidity	20 to 80% (no condensing)
Optional accessories	NSBK-EB05, NSBK-CL04/05, NSBK-HS05/1T, NSBK-HS05/2T, RM-NS1000

*1: VISCA and Pelco-D are supported.

NSBK-EB05		
Video/Audio		
Number of analog input		Video input (x16)/Audio input (x4)*3
Input video format		NTSC
Video codec		H.264/JPEG
Motion detection		Yes
Noise reduction		Yes
Video resolution		NTSC: 720 x 480; 720 x 240; 704 x 480; 704 x 240; 352 x 240
Maximum frame rate		NTSC: 30 fps/camera (total 480 fps)
Video quality		Bitrate: 64 Kbps to 2 Mbps (H.264) Quality: Low, Medium, High, Highest (JPEG)*4
Audio codec		G.711, 64 Kbps
Interface		
Input connector (by supplied cable)	Video input connector (cable)	BNC (x16) (black)
	Audio input connector (cable)	RCA (x4) (white)
General		
Operating temperature		41 to 104 ˚F (5 to 40 ˚C)
Operating humidity		20 to 80%
Dimensions (Board)		Approx. 7 5/8 x 2 3/4 inches (192 x 69 mm) (exclusive projections)
Weight	Board	Approx. 3.5 oz (100 g)
	Cable	Approx. 8.5 oz (240 g)
Supplied accessories		Analog video/audio input cable (1), Installation manual (1), Warranty booklet (1)

*2: The audio channels from No. 1 to No. 4 are allotted the video channels 1 to 4 respectively.
*3: When using a JPEG format, the total frame rate for the system is decreased to 240 fps in High quality mode and 160 fps in Highest quality mode.

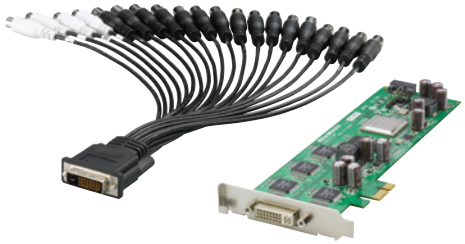

NSBK-DH05	
Video/Audio	
Maximum Decoding Resolution	Up to 1,920 x 1,080
Video Decoding Format	H.264/MPEG-4
Monitor Output (Display Resolution)	1920 x 1200 (not supported by HDMI); 1920 x 1080; 1360 x 768; 1600 x 1200; 1280 x 1024; 1024 x 768
Display Frame Rate	Max. 60 fps (30 fps x 2 channels) at 1920 x 1080 at 4 Mbps Max. 60 fps (15 fps x 4 channels) at 1920 x 1080 at 4 Mbps Max. 120 fps (30 fps x 4 channels) at 1280 x 720 at 2 Mbps Max. 135 fps (15 fps x 9 channels) at 1280 x 720 at 2 Mbps Max. 270 fps (30 fps x 9 channels) at 720 x 480/576 at 1 Mbps Max. 240 fps (15 fps x 16 channels) at 720 x 480/576 at 1 Mbps
Interface	
Monitor Output *4	HDMI (x1), analog RGB (D-sub 15-pin) (x1)
Audio Output	1 channel (HDMI) *5
General	
Operating Temperature	41˚F to 104˚F (5˚C to 40˚C)
	20% to 80%
	6 3/4 inches x 3 1/4 inches x 1 1/8 inches (170 mm x 80 mm x 27 mm) (exclusive projections)
	5 oz (130 g)
	Analog RGB cable (for internal wiring) (1), Connector cover (1), Installation manual (1), Warranty booklet (1)

*4: Either the HDMI or analog RGB interface can be used.
*5: When using the HDMI interface, the alarm sound (beep tone) may not be properly produced (this depends on the monitor connected). If so, please use the NSR-500's audio line output.

All encoders in this chart comply with UL60950-1. (Except blades).

Intelligent Monitoring Software

REALSHOT® MANAGER ADVANCED AND REALSHOT MANAGER LITE

	IMZ-NS101	IMZ-NS104	IMZ-NS109	IMZ-NS116	IMZ-NS132	RSM Lite (Free Software)
	RSM Advanced with 1 camera license	RSM Advanced with 4 camera licenses	RSM Advanced with 9 camera licenses	RSM Advanced with 16 camera licenses	RSM Advanced with 32 camera licenses	RSM Lite with 9 camera licenses
Specifications						
Video Compression Format	H.264/MPEG-4/JPEG					
Audio Compression Format	G.711/G.726					
Number of Clients (Recommendation) *1	10					3
Number of Cameras Supported	1 *2	4 *2	9 *2	16 *2	32	9
Number of Audio Supported	1	4	9	16	32	9-Sony cameras only
System Requirements						
Operating System	Windows 7 Professional, Windows 7 Enterprise, Windows Vista® Business SP2 (32 bit), Windows Vista® Enterprise SP2 (32 bit), Windows® XP Professional SP3 (32 bit), Windows® Server 2003 Standard Edition SP2(32bit), Windows® Server 2008 Standard Edition SP2 (32 bit), Windows Server 2008 R2 Standard					
CPU	Intel Core™ 2Duo 2.0-GHz or higher					
Main Memory	1 GB or more (2 GB Recommended)					
HDD	2 GB spare capacity					
Video Card	1024 x 768, 16/24 bit color					
Network Interface Card (NIC)	100BASE-TX or higher					
Display Resolution	1024 x 768 or higher					
Optional Accessories	RM-NS1000 (System Controller)					

*1: The figures in the table are recommended numbers of clients to assure high performance. It is possible to connect more clients to a server, but such increase may deteriorate the overall performance.
*2: It is possible to combine multiple licenses.

IP Mini Dome Cameras Enclosures and Mounts

How to select a camera and mount: Choose a Camera → Select **Outdoor** or **Indoor** Use → If you select **Outdoor**, select the type of Wall Mount → If you select the Gooseneck Wall Mount you can stop or continue to select an adapter (ie: Conduit Box, Corner Adapter, or Pole Adapter).

If you select **Indoor**, select the type of Enclosure: → If you choose **Pendant Enclosures**, select a type of mount – Gooseneck Wall, Conduit Box or Corner Adapter → If you choose **Flush/Recessed**, then select Plenum Enclosure or Bracket Mounting Kit (selection is complete)

IP MINI DOME CAMERAS		OUTDOOR						INDOOR								
		SURFACE	PENDANT	PENDANT WALL MOUNT and ADAPTERS				WALL	PENDANT	PENDANT WALL MOUNT and ADAPTERS				FLUSH / RECESSED		DOME COVER
Series	Model Name	BACKBOX	PENDANT CAP	GOOSENECK WALL	CONDUIT BOX	CORNER ADAPTER	POLE ADAPTER	WALL BRACKET	PENDANT CAP ONLY	GOOSENECK WALL	CONDUIT BOX	CORNER ADAPTER	POLE ADAPTER	PLENUM ENCLOSURE	BRACKET - MOUNTING KIT	SMOKE
X Series Indoor Mini Dome	SNC-DH110/B	–	–	–	–	–	–	–	UNI-MDPX	UNI-WMB4 (requires cap sold separately)	UNI-WMBB1	UNI-CMA1	UNI-PMA1	–	–	–
	SNC-DH110/W															
	SNC-DH110T/B															
	SNC-DH110T/W															
	SNC-DH210/B															
	SNC-DH210/W															
	SNC-DH210T/B															
	SNC-DH210T/W															
	SNC-XM631															
E&V Series Indoor Mini Dome (incl. Hybrid)	SNC-EM520	–	–	–	–	–	–	UNI-UMB1	UNI-MDPDH120	UNI-WMB4 (requires cap sold separately)	UNI-WMBB1	UNI-CMA1	UNI-PMA1	UNI-ILD3C3	YT-ICB140/ YT-ICB600	UNI-LD140S
	SNC-DH120															
	SNC-DH140															
	SNC-DH220															
	SNC-DH240															
	SNC-ZM550															
E&V Series Indoor Vandal Mini Dome (incl. Hybrid)	SNC-EM521															UNI-LD280S
	SNC-DH120T															
	SNC-DH140T															
	SNC-DH220T															
	SNC-DH240T															
	SNC-ZM551															
IPELA ENGINE EX E&V Series Indoor Mini Dome	SNC-EM600	–	–	–	–	–	–	UNI-UMB1	UNI-MDPDH120	UNI-WMB4 (requires cap sold separately)	UNI-WMBB1	UNI-CMA1	UNI-PMA1	–	YT-ICB600	YT-LD600S
	SNC-EM630															
	SNC-VM600B															
	SNC-VM600															
	SNC-VM630															
IPELA ENGINE EX E&V Series Indoor Vandal Mini Dome	SNC-EM601															YT-LD601S
	SNC-EM631															
	SNC-VM601B															
	SNC-VM601															
	SNC-VM631															
E&V Series Outdoor Mini Dome	SNC-DH160	UNI-BBB2	UNI-MDP-DH180	UNI-WMB4 /UNI-MDB3 (consists of UNI-MDPDH180 + UNI-WMB4)	UNI-WMBB1	UNI-CMA1	UNI-PMA1	–	UNI-MDPDH180	UNI-WMB4 (requires cap sold separately)	UNI-WMBB1	UNI-CMA1	UNI-PMA1	–	YT-ICB45	UNI-LD280S
	SNC-DH180															
	SNC-DH260															
	SNC-DH280															
IPELA ENGINE EX E&V Series Outdoor Mini Dome	SNC-EM602RC															
	SNC-EM632RC															
	SNC-VM602R															
	SNC-VM632R															
360-Degree View	SNC-HM662	-	UNI-MDPHM	UNI-WMB4	UNI-WMBB1	UNI-CMA1	UNI-PMA1	–	UNI-MDPHM	UNI-WMB4	UNI-WMBB1	UNI-CMA1	UNI-PMA1	–	–	–

UNI-MDB3

UNI-WMBB1

UNI-CMA1

UNI-WMB3

UNI-UMB1

UNI-MDPDH120

UNI-MDPDH180

UNI-WMB4

UNI-ILD3C3

YT-ICB140

YT-ICB45

UNI-MDPX

YT-ICB600

UNI-BBB2

IP Fixed Cameras Enclosures and Mounts

How to select a camera and mount: Choose a Camera → Select **Outdoor** or **Indoor** Use → If you select **Outdoor**, select the type of Enclosure: → If you select **Indoor**, select the type of Enclosure: → If you choose **Flush/Recessed**, then select Normal Enclosure or Bracket Mounting Kit (selection is complete)

	OUTDOOR	INDOOR		
	ENCLOSURES / MOUNTS	WALL MOUNT		FLUSH / RECESSED
Model Name	ENCLOSURE W/WALL MOUNT	WALL MOUNT W/ENCLOSURE	WALL MOUNT ONLY	PLENUM ENCLOSURE
SNC-CH110/B SNC-CH110/S	–	–	UNI-XBB1/T (black) UNI-XBS1/T (silver)	–
SNC-CH210/B SNC-CH210/S				
SNC-CH120	SNC-UNIHB/1	SNC-UNI	–	UNI-IFF7C3 (clear) UNI-IFF7T3 (tinted)
SNC-CH140				
SNC-CH220				
SNC-CH240				
SNC-ZB550				
SNC-VB600B				
SNC-VB600				
SNC-VB635				
SNC-VB630				
SNC-EB520				
SNC-EB600B				
SNC-EB600				
SNC-EB630B				
SNC-EB630				
SNC-VB632D	Bullet Cameras can use optional UNI-BBB1 back box suitable for surface wall or pole mount	Bullet Cameras can use optional UNI-BBB1 back box suitable for surface wall or pole mount	Bullet Cameras can use optional UNI-BBB1 back box suitable for surface wall or pole mount	–
SNC-EB602R				
SNC-EB632R				
SNC-CH160				
SNC-CH180				
SNC-CH260				
SNC-CH280				
SNC-CX600W	-	-	Included Accessory	-
SNC-CX600				

UNI-XBB1/T

UNI-XBS1/T

SNC-UNIHB/1

SNC-UNI

UNI-IFF7C3 (clear)
UNI-IFF7T3 (tinted)

UNI-BBB1

IP Rapid Dome and PTZ Cameras Enclosures and Mounts

How to select a camera and mount: Choose a Camera → Select **Outdoor** or **Indoor** Use → If you select **Outdoor**, select the type of Enclosure: → If you choose one of the following: – **Flush/Recessed** (selection is complete) – **Surface** (selection is complete) → If you choose one of the **Pendant Enclosures**: – **Pressurized, Ruggedized, or Normal**, select a type of mount – Parapet, Low Profile Wall or Gooseneck → If you select the Low Profile Wall Mount or the Gooseneck Wall Mount you can stop or continue to select an adapter (ie: Wall Surface Conduit Box, Corner Adapter, Pole Adapter or Power Block). Adapters not needed for Parapet Roof Mount.

IP RAPID DOME AND PTZ		OUTDOOR												
		SURFACE		PENDANT ENCLOSURES			PENDANT MOUNTS and ADAPTERS							
Series	**Model Name**	**FLUSH / RECESSED**	**SURFACE**	**PRESSURIZED**	**RUGGEDIZED**	**NORMAL**	**PARAPET ROOF**	**LOW PROFILE WALL MOUNT**	**GOOSENECK WALL**	**WALL SURFACE (CONDUIT) BOX**	**CORNER ADAPTER**	**POLE ADAPTER**	**POWER BLOCK**	**TINTED DOME COVER**
G5 Indoor PTZ - ER/EP Series (inc. Hybrid)	SNC-EP520	UNI-OFL7C2 (clear) UNI-OFL7T2 (tinted)	UNI-OSL7C2 (clear) UNI-OSL7T2 (tinted)	UNI-OPL7C2 (clear) UNI-OPL7T2 (tinted)	UNI-ORL7C2 (clear) UNI-ORL7T2 (tinted)	UNI-ONL7C2 (clear) UNI-ONL7T2 (tinted)	UNI-RMB1 or UNI-RMB2	UNI-WMB3	UNI-WMB1	UNI-WMBB1	UNI-CMA1	UNI-PMA1	UNI-PBU1	–
	SNC-EP550													
	SNC-EP580													
	SNC-ER520													
	SNC-ER550													
	SNC-ER580													
	SNC-RH124													
	SNC-RS44N													
	SNC-RS46N													
	SNC-ZR550													
	SNC-ZP550													
G6 Indoor PTZ - SNC-WR600/630	SNC-WR600													
	SNC-WR630													
Outdoor PTZ - SNC-WR602/632 - SNC-ER585 - RH/RS Series - UNI-ON Series	SNC-ER585	–	–	–	–	–	UNI-RMB1 or UNI-RMB2	UNI-WMB3	UNI-WMB1	UNI-WMBB1	UNI-CMA1	UNI-PMA1	UNI-PBU1	YT-LDR632S
	SNC-WR632C													
	SNC-WR602C													
	SNC-RH164													–
	SNC-RS84N													
	SNC-RS86N													
	UNI-ONEP520C7	–	–	–	–	–	UNI-RMB1 or UNI-RMB2	UNI-WMB3	UNI-WMB1	UNI-WMBB1	UNI-CMA1	UNI-PMA1	UNI-PBU1	Models with tinted dome cover are also available (T2, T7 instead of C2, C7 suffix)
	UNI-ONEP550C7													
	UNI-ONEP580C7													
	UNI-ONEP520C7													
	UNI-ONEP550C7													
	UNI-ONEP580C7													
	UNI-ONEP520C2													
	UNI-ONEP550C2													
	UNI-ONEP580C2													
	UNI-ONEP520C2													
	UNI-ONEP550C2													
	UNI-ONEP580C2													

If you select **Indoor**, select the type of Enclosure:

If you choose **Flush/Recessed**, then select Normal Enclosure or Bracket Mounting Kit (selection is complete)

If you choose one of the **Pendant Enclosures**:
– **Ruggedized** or **Normal**, select a type of mount – Gooseneck Wall or Low Profile Wall and stop or select either the Conduit Box or Corner Adapter

INDOOR											COMMON	
FLUSH / RECESSED				PENDANT ENCLOSURES		PENDANT MOUNTS and ADAPTERS				WALL MOUNT	DOME COVERS	
NORMAL ENCLOSURE	FLUSH MOUNT KIT	CLEAR DOME COVER for FLUSH	TINTED DOME COVER for FLUSH	RUGGEDIZED	NORMAL	GOOSE-NECK WALL	LOW PROFILE WALL MOUNT	CONDUIT BOX	CORNER ADAPTER	NON-PENDANT WALL BRACKET	NORMAL	TINTED
UNI-ID7C3 (clear) UNI-ID7T3 (tinted)	YT-ICB124 (w/o Dome Cover) YT-ICB630 (w/o Dome Cover)	YT-LD124C (for YT-ICB124 /YT-ICB630)	YT-LD124S (for YT-ICB124 /YT-ICB630)	UNI-IRL7C2 (clear) UNI-IRL7T2 (tinted)	UNI-INL7C2 (clear) UNI-INL7T2 (tinted)	UNI-WMB1	UNI-WMB3	UNI-WMBB1	UNI-CMA1	UNI-UMB1	UNI-RD7C (Dome Cover Replacement for UNI-Enclosures)	UNI-RD7T (Dome Cover Replacement for UNI-Enclosures)
–	–	–	–	–	–	–	–	–	–	–	–	–
–	–	–	–	–	–	–	–	–	–	–	UNI-RD7C (Dome Cover Replacement for UNI-Enclosures)	UNI-RD7T (Dome Cover Replacement for UNI-Enclosures)

UNI-OFL7C2 (clear)
UNI-OFL7T2 (tinted)

UNI-OSL7C2 (clear)
UNI-OSL7T2 (tinted)

UNI-OPL7C2 (clear)
UNI-OPL7T2 (tinted)

UNI-ORL7C2 (clear)
UNI-ORL7T2 (tinted)

UNI-ONL7C2 (clear)
UNI-ONL7T2 (tinted)

UNI-RMB1

UNI-WMB3

UNI-WMB1

UNI-WMBB1

UNI-CMA1

UNI-PMA1

UNI-PBU1

UNI-IRL7C2 (clear)
UNI-IRL7T2 (tinted)

UNI-INL7C2 (clear)
UNI-INL7T2 (tinted)

UNI-ID7C3 (clear)
UNI-ID7T3 (tinted)

YT-ICB124

YT-LD124C (clear)
YT-LD124S (smoked)
(for use with YT-ICB124, YT-ICB600 & YT-ICB630)

C2 - AC24V input, AC24V output inside dome.
C3 - no electronics. Cables are direct feed to camera.

Mount Options and Enclosures

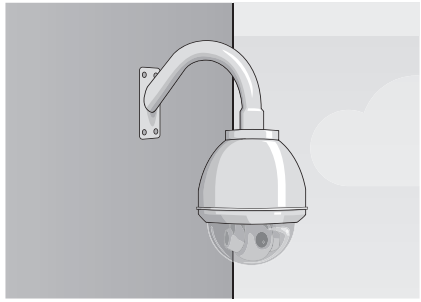

Wall Mount Bracket

- UNI-WMB1 - 1.5" NPT threaded
- Shown with 7" pendant enclosure

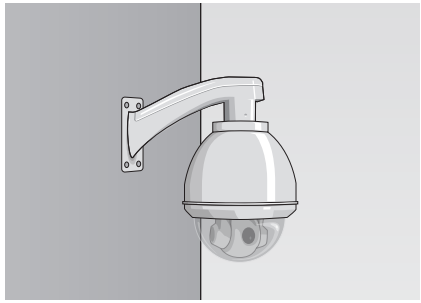

Wall Mount Bracket

- UNI-WMB3 - low profile wall mount for 7" pendant dome enclosure
- Shown with 7" pendant enclosure

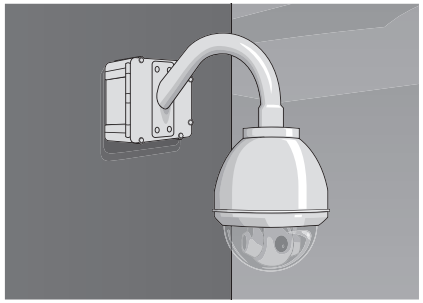

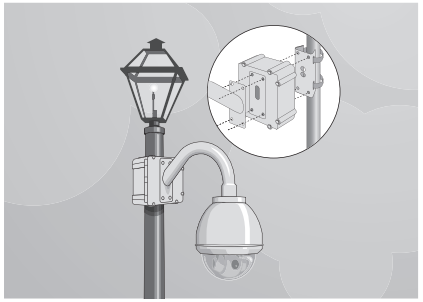

Power Block Unit (Wall/Pole Mount)

- UNI-PBU1 - AC 110/220V input, AC24V output, 100VA
- Shown with UNI-WMB1 and 7" dome enclosure

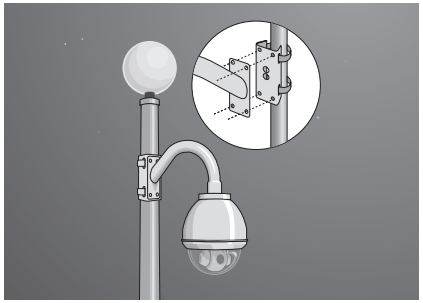

Pole Mount Adaptor

- UNI-PMA1
- Shown with UNI-WMB1 gooseneck wall mount and 7" dome enclosure

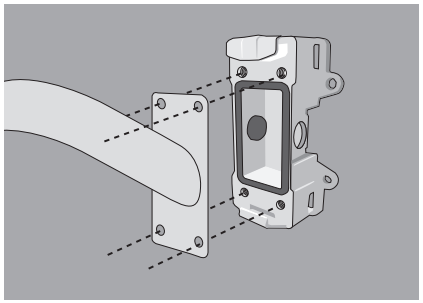

Surface/Pole Mount Adaptor

- Used with UNI-WMB1, UNI-WMB3, UNI-WMB4 wall mount brackets

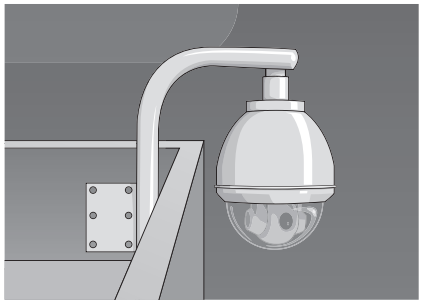

Roof Mount (Parapet)

- UNI-RMB1 parapet mount extends approximately 2 feet out from vertical
- 1.5" threaded
- Shown with 7" pendant enclosure

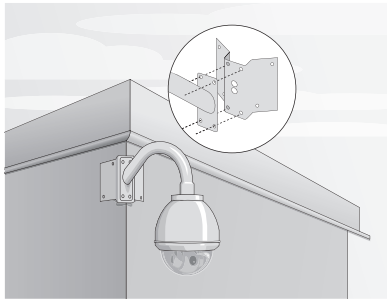

Corner Mount

Mount Enclosures Needed:

- UNI-CMA1 Aluminum Corner Mount Adapter shown with UNI-WMB1 and 7" pendant mount enclosure

Glossary and Warranty Info

IP66

The "IP" of IP66 stands for Ingress Protection, and its two-digit number shows the durability rating of equipment for outdoor use. The first digit of IP66 relates to the ingress protection against dust, and "6" means "dust tight". The second digit of IP66 relates to the ingress protection against water, and "6" means protected against "heavy jet sprays," such as conditions that can be encountered in hurricanes.

IK10

The IK rating system classifies the level of protection provided by electrical appliances against external impacts from the outside.
An IK10-rated camera can withstand the impact of 20 Joules, meaning the camera will withstand the impact of a 5 kg weight dropped on it from a height of 40 cm.

Day/Night

A day/night camera has two modes of operation: a day mode and a night mode. The camera switches from day mode (Color) to night mode (B/W) by replacing its infrared-cut filter with a clear filter. In night mode, the camera becomes sensitive to near-IR light and is capable of reproducing images even when the scene is not visible to the naked eye.

Electrical D/N

Electrical D/N is a technology to make the image more visible in low-light conditions by removing the chroma signal to produce a B/W image.

Wide-D

State-of-the-art technologies to expand the video dynamic range of the camera to improve the visibility of images even in extremely high-contrast environments. Wide-D is a powerful feature to compensate for scenes with extremely poor contrast.

Visibility Enhancer (VE)

VE is one of Sony's new technologies that optimizes contrast and makes a scene more visible. It is ideal for scenes where objects are hard to recognize due to severe backlight or shadows. VE optimizes the brightness and color reproduction of an image dynamically on a pixel-by-pixel basis while continuously adapting to the scene. Technically, VE stretches the contrast in both the backlit portions and the shadows within the given dynamic range, which is different from Wide-D.
VE also contributes to the high sensitivity of the camera. By combining VE with XDNR, the camera can reproduce clear and bright images in very low-light conditions, while keeping noise at a minimal level.

View-DR® Technology

View-DR is Sony's latest technology to produce images with an extremely wide dynamic range. View-DR is a combination of Sony's full-capture Wide-D technology, the high-speed Exmor CMOS sensor, and Visibility Enhancer (VE). The full-capture Wide-D technology used in View-DR technology uses an electronic shutter to capture multiple images, to reproduce each frame. One image is taken using a 'standard' exposure time and either one or three images are taken using very short exposure times depending on the camera type. With the newly developed View-DR algorithm, all of the electrons converted from the captured light is fully used by the imager, which is quite different from DynaView technology and some other Wide-D technologies in the industry that discard approximately ½ of the electrons. As a result, View-DR nearly doubles the sensitivity compared to conventional Wide-D technologies. To capture multiple HD resolution images at a very high speed, the "Exmor" CMOS sensor was adopted because of its high-speed readout characteristics. During the process of combining multiple images, the Visibility Enhancer (VE) is employed to provide a high level of chrominance and luminance. With View-DR, the monitored images become very visible – sometimes even more than when viewed with our naked eyes.

XDNR® Technology (eXcellent Dynamic Noise Reduction)

XDNR is Sony's latest technology for noise reduction in IP security cameras. XDNR utilizes 2D and 3D noise reduction methods adaptively to scenes. Under low-light conditions, XDNR technology provides clear images for both moving objects and still portions of the image, using 2DNR and 3DNR, respectively. This method provides clear images while minimizing motion blur which is a challenge in any outdoor surveillance monitoring applications, such as in parking lots.

ONVIF® Software

ONVIF software defines a common protocol for the exchange of information between different network video devices regardless of manufacturer, and achieves greater interoperability in multi-vendor network video systems.

PoE (Power-over-Ethernet, IEEE 802.3af)

PoE enables networked devices to receive power up to 12.95 W from PoE-enabled equipment through the same Ethernet cable that transports data. It provides substantial savings in installation costs and can simplify the installation process.

HPoE (High PoE, IEEE 802.3at)

HPoE enables networked devices to receive power up to 25 W from hPoE-enabled equipment through the same Ethernet cable that transports data. HPoE is useful especially for PTZ/Rapid Dome cameras that require motor control.

HPoE+

HPoE+ enables networked devices to receive power in excess of 25W from HPoE-enabled equipment through the same Ethernet cable that transports data. HPoE is usefull especially for outdoor PTZ/Rapid Dome cameras that require motor control plus heaters.

DEPA™ System

With a Sony DEPA system, DEPA-enabled cameras send not only video images but also related metadata, including object data (size and position) to the DEPA-enabled recorder. Since part of the image processing is done on the camera side, the load to the recorder can be reduced enabling camera expansion. Conventional video analytic systems, on the other hand, process images solely on the recorder side often causing CPU overload.

DEPA Advanced

DEPA Advanced is an enhanced DEPA technology. Unlike DEPA, a camera incorporating DEPA Advanced completes the entire DEPA analysis such as intrusion detection with a virtual borderline on the camera side, and sends only an alarm to the recorder. Enhancements also include a tamper alarm, shadow cancellation, a beam intrusion detector, and audio analysis. Since the analytic processing is completed in the camera, end users can benefit from DEPA Advanced because it can be easily integrated with a variety of recorders and/or video management solutions.

3-Year Warranty for Network Cameras, Encoders,and Accessories

The Sony Security Products 3-year warranty covers labor and materials for repair of defective IPELA™ 'SNC' cameras, 'SNT' encoders, and 'UNI' accessories purchased within the United States on or after July 1, 2010. Offer excludes discontinued models and accessories for a period of three years from the date of purchase. For more details, please visit sony.com/security or contact your Sony Sales Representative.

1-Year Warranty for Security Accessories

The Sony Security 1-year warranty covers labor from date of purchase and covers YS, YT, SNCA, NSBK, RMM and SSMA accessories.

Sony Electronics Inc.
1 Sony Drive
Park Ridge, NJ 07656
sony.com/security

©2014 Sony Electronics Inc. All rights reserved. Reproduction in whole or in part without permission is prohibited. Features and specifications are subject to change without notice. The values for wieght and measurements are approximate. Sony, IPELA, IPELA ENGINE, IPELA HYBRID, Exmor, View-DR, XDNR, DynaView, DEPA, Onvif and the Sony logo are trademarks of Sony. SLOC is a trademark of Intersil Corporation. All other trademarks are the property of their respective owners.

S-IP2120_Oct2014 (MK10974V3)

Printed in USA (10/14)